IMPULSE

COLORFUL LIVING

WELCOME

Greetings!

Ever since IMPULSE! was born (over 20 years ago now!), we've been a company that is all about color. Even as we have dabbled in the world of neutrals and soft tones, we always find ourselves creeping our way back into a world of fascinating pantone combinations. Colors, textures and always an urge to "mix and match" in unexpected ways just seem to define our DNA.

In our latest collection of tabletop offerings, you'll find so many new additions that are full of color and personality. Personally, I'm a huge fan of our new dinnerware collections as they add such spirit and bold design to any tabletop decor. I love the creative sense of passion that lies just beneath every glaze, and the human touch that is so apparent in every piece. I'm truly fascinated by so many new IMPULSE! creations that you'll discover in the pages that follow – and I hope you find a collection that defines you, your brand, and most importantly, that adds a touch of excitement to your world.

Let's celebrate our return to good times. Let's rejoice in our health and happiness. And in typical IMPULSE! style, let's all raise a glass to welcome unbridled beauty into our homes, hotels, restaurants and other venues where we spend time with family and friends.

Enjoy your journey and thank you so much for making us a part of it.

Warmest regards,

Rob Berman
President & Founder

TABLE OF CONTENTS

Who's Hungry?	6
Best Barware Ever	42
The Finer Touches	64
Time To Get Cooking	78
Porcelain Whiteware	88
Unbreakably Yours	104
Beautiful Buffets	112
Decorative Touches	158
Let There Be Light!	176
Dining Al Fresco	206
It's 5:00 Somewhere	246

WHO'S HUNGRY?

Dinnerware, dishes and serving essentials

FIORE & PERLA

Mixing and matching fresh hues of lemon, lime and sky blue in a showstopping collection that brightens any decor.

Perla Large Plate
1914 Stoneware
10"D x 1.3"H

Perla Side Plate
1915 Stoneware
8.5"D x 1"H

Perla Bowl
1916 Stoneware
6"D x 3"H

Fiore Main Plate
7230 Porcelain
11"D x 1.3"H

Fiore Side Plate
7231 Porcelain
8"D x 1"H

Fiore Deep Plate
7232 Porcelain
9.5"D x 2"H

Fiore Bowl
7233 Porcelain
5.5"D x 2.75"H

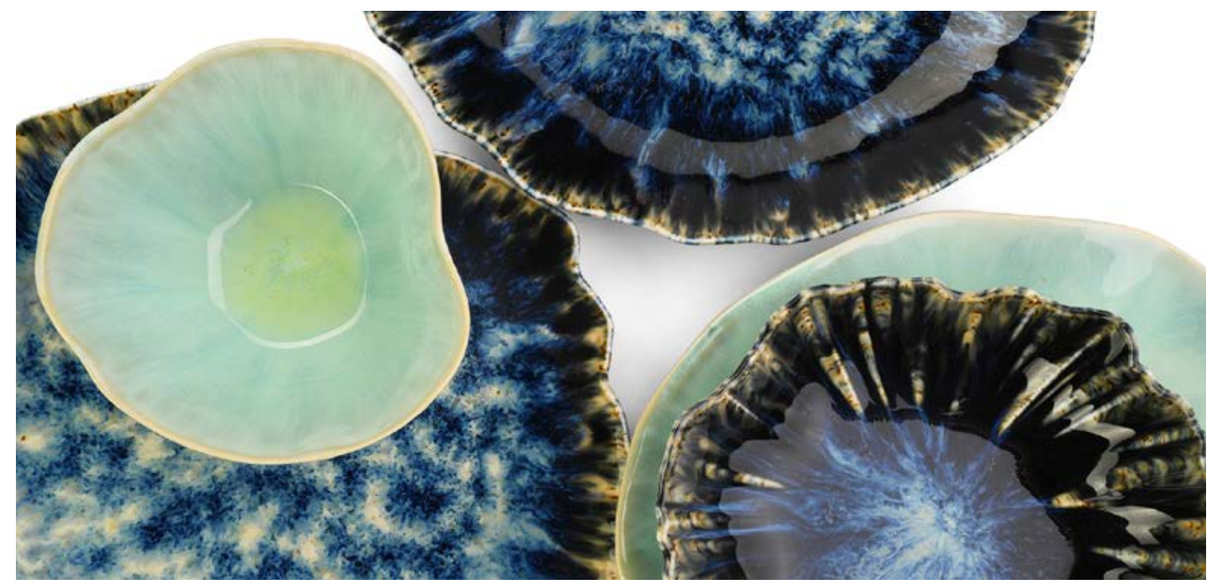

LA MER

Specialty dinnerware accents brought to new levels. Combining high volume durability with show-stopping waves of color and pattern.

La Mer Platter Tan
7229 Porcelain
8"W x 11"L x 1"H

La Mer Platter Blue
7225 Porcelain
8"W x 11"L x 1"H

La Mer Main Plate Blue
7222 Porcelain
11"D x 1"H

La Mer Bowl Blue
7223 Porcelain
8"W x 9"L x 2.7"H - 20 oz.

La Mer Deep Plate Blue
7224 Porcelain
8"D x 2.3"H - 13 oz.

La Mer Main Plate Tan
7226 Porcelain
11"D x 1"H

La Mer Bowl Tan
7227 Porcelain
8"W x 9"L x 2.7"H - 20 oz.

La Mer Deep Plate Tan
7228 Porcelain
8"D x 2.3"H - 13 oz.

TANGO

Striking, bold and a touch dramatic, this glazed stoneware will steal every show.

Tango Large Plate
1908 Stoneware
10"D x 0.59"H

Tango Side Plate
1909 Stoneware
8.5"D x 0.59"H

Tango Bowl
1910 Stoneware
6"D x 2.5"H

MASSIMO

Elevating dinnerware standards one bite at a time. One of our most captivating lines of dinnerware that we have ever introduced, Massimo is like no other.

Massimo Side Plate
1912 Stoneware
8.5"D x 0.59"H

Massimo Bowl
1913 Stoneware
6"D x 2.5"H

Massimo Large Plate
1911 Stoneware
10"D x 0.59"H

PLAYA

Fun bowls that are perfect for so many sips and snacks. Happy colors and stackable designs – the perfect serving accessory to brighten any setting.

Playa Bowl Sky
7550 Stoneware
5.2"D x 1.75"H - 4 oz.

Playa Bowl Rose
7549 Stoneware
5.2"D x 1.75"H - 4 oz.

Playa Bowl Tan
7547 Stoneware
5.2"D x 1.75"H - 4 oz.

Playa Bowl Raspberry
7548 Stoneware
5.2"D x 1.75"H - 4 oz.

PONZA

Sophisticated hues of amber, cream and chocolate brown completed with a bronze exterior – a stunning collection of dinnerware and food service vessels that are as durable as they are good looking.

Ponza Plate
1922 Stoneware
10"D x 1"H

Ponza Large Bowl
1920 Stoneware
4.25"D x 1.75"H - 5 oz.

Ponza Small Bowl
1921 Stoneware
2.75"D x 1.75"H - 2 oz.

GASTRONOMY GOODS

Fabulous textures, rustic silhouettes, and a combination of matte and glossy porcelain patinas make our latest collection of whiteware serving dishes your first stop when presentation must be just a tad over the top.

Rocco Small Round Dish
1529 Porcelain
4.7"D x 1.2"H

Rocco Large Round Dish
1525 Porcelain
9.8"D x 1.6"H

Rocco Oval Dish
1526 Porcelain
9.4"L x 6.7"W x 1.8"H

Orca Dish Large
1531 Porcelain
4.75"D x 2.6"H

Orca Dish Small
1535 Porcelain
3"D x 1.7"H

Burgo Plate
1524 Porcelain
11.8"D x 1"H

Bordalo Plate
1536 Porcelain
10"D x 0.5"H

Cortalina Oval Plate
1523 Porcelain
12"L x 9"W x 1"H

FABULOUS ORGANIC DESIGNS & CAPTIVATING TEXTURES

Cortina Dish
1533 Porcelain
3.7"L x 3.5"W x 2.6"H - 2.5 oz.

Crisa Plate
1528 Porcelain
8.7"D x 1.2"H

Fondata Bowl
1527 Porcelain
8.5"L x 8.3"W x 2.2"H - 10 oz.

Fondata Oval Plate
1530 Porcelain
12.2"L x 6.5"W x 0.6"H

Cava Carafe
1534 Porcelain
4"L x 3"W x 3.3"H - 6.8 oz.

Cava Dish
1532 Porcelain
6.3"L x 4.7"W x 2.2"H - 3.7 oz.

Sirena Dish
1123 Porcelain
5"L x 3.5"W x 1.6"H

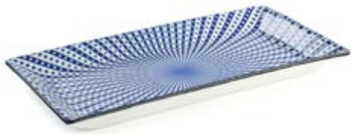

Fuji Rectangle Plate Blue
1260 Ceramic
9.5"L x 4.8"W x .7"H

Fuji Large Plate Blue
1261 Ceramic
10"D x 1.2"H

Fuji Small Plate Blue
1262 Ceramic
8"D x 1"H

PLAYING WITH PATTERNS

Mesmerizing collections that make any occasion exotic.

Sapporo Small Bowl Black
1267 Ceramic
4.4"D x 1.3"H

Sapporo Large Plate Black
1265 Ceramic
10.5"D x 1.2"H

Sapporo Rectangle Plate Black
1266 Ceramic
11.2"L x 6.3"W x .9"H

MARE

Rich tones of cobalt blue porcelain combined with a stunning charcoal glazed exterior... spectacular and substantial dinnerware.

Mare 10" Plate
1305 Porcelain
10"D x 0.75"H

Mare 8" Plate
1306 Porcelain
8"D x 0.75"H

Mare Mug
1320 Porcelain
3.35"D x 4"H

Mare 6" Bowl
1309 Porcelain
6"D x 2.5"H

Mare 10" Bowl
1312 Porcelain
10"D x 2.5"H

GORKA

These perfectly sized and glossy textured dishes with a pop of rich color have endless potential and will elevate your snacks, amenities and small bites to new heights.

Gorka Dish Small Blue
1124 Stoneware
7.7"L x 4.6"W x 1.8"H

Gorka Dish Large Blue
1125 Stoneware
10"L x 6"W x 2"H

Gorka Dish Large Green
1129 Stoneware
10"L x 6"W x 2"H

Gorka Dish Small Green
1126 Stoneware
7.7"L x 4.6"W x 1.8"H

Milano Square Plate Black
1268 Ceramic
9.5"L x 9.5"W x 9"H

Monteverde S & P Set
9048 Matte Plastic/Stainless Steel
6.5" H

Milano Bowl Black
1269 Ceramic
6"D x 3"H - 20 oz

Geneva Small Bowl
8007 Porcelain
5.0"D x 2.5"H

Geneva Teacup/Saucer
7983 Porcelain
5.9"W x 5.9"H x 2.28"H - 8 oz.

COLORFUL CONTAINERS

Tahoe Bowl Large
1263 Ceramic
8.2"D x 3.2" H

Juno Bowl (Set of 4)
7637 Ceramic
6"D x 3.5"H

Tahoe Bowl Small
1264 Ceramic
4.8"D x 2.2"H

Bali Bowl Medium Black
8316 Porcelain
6.1"D x 3.1"H

Bali Bowl Small Black
8315 Porcelain
4.7"D x 2.2"H

Bali Bowl Large Black
8317 Porcelain
8.3"D x 3.1"H

Have some fun when it comes to presenting your culinary concoctions. New patterns, fun shapes... all bases are covered!

Bali Bowl Large Blue
8323 Porcelain
8.3"D x 3.1"H

Bali Bowl Small Blue
8321 Porcelain
4.7"D x 2.2"H

Bali Bowl Medium Blue
8322 Porcelain
6.1"D x 3.1"H

Rio Bowl (Set of 4)
7638 Ceramic
4.5"D x 3.0"H

FORTUNA

Alluring resin pieces in a variety of unique swirling color options guarantee a set like no other. These one-of-a-kind artistic pieces are perfect for serving salads, dinners and deserts, or to create a unique table top display. The elegant look of marble without the weight and dishwasher safe.

ASK ABOUT CUSTOMIZABLE MATCHING UTENSILS!

a. Fortuna Snack Bowl Tortoise
9937 Resin
5.5"D x 3"H

b. Fortuna Large Bowl
Resin, 12"D x 5"H
Tortoise 1545, White 9949

c. Fortuna Medium Round Platter
Resin, 14"D x 2"H
Tortoise 1540, White 9944

Fortuna Large Round Platter
Resin, 18"D x 2.25"H
Tortoise 1541, White 9951

d. Fortuna Rectangular Platter
Resin, 12"L x 5.25"W x 1"H
Tortoise 9996, White 9943

e. Fortuna Serving Bowl Tortoise
1001 Resin
12"D x 5"H

f. Fortuna Medium Deep Platter
Resin, 14"D x 3"H
Tortoise 1542, White 9945

Fortuna Large Deep Platter
Resin, 14"D x 3"H
Tortoise 1543, White 9952

g. Fortuna Medium Bowl
Resin, 8.5"D x 2"H
Tortoise 9987, Blue/White 9986, Yellow/White 9985, Red/White 9984, White/White 9947

**Please inquire about custom pieces*

Fortuna Serving Bowl
Resin, 11.5"D x 3"H
Red/White 9999, Yellow/White 10000,
Tortoise 10001, Blue/White 10002,
White/White 9942

Unique swirls of color ensure
each piece is 100% exclusive

Fortuna 10" Serving Bowl White
9948 Resin
10"D x 3"H

Fortuna Medium Plate White
9954 Resin
8"D x 0.25"H

Fortuna Large Plate White
9953 Resin
10"D x 0.25"H

Fortuna Snack Bowl
Resin, 5.5"D x 3"H
Blue/White 9941, White/White 9940, Red/White 9939,
Yellow/White 9938, Tortoise 9937

Fortuna Small Footed Platter
Resin, 7.75"D x 0.7"H
Cobalt 9988, Rose 9989,
Tangerine 9990, Tortoise 9991

Fortuna Large Footed Platter
Resin, 11.75"D x 0.7"H
Cobalt 9992, Rose 9993,
Tangerine 9994, Tortoise 9995

Fortuna Large Rectangular Platter
Resin, 20.5"L x 10"W x 1"H
White (9950), Tortoise 1544

Fortuna Spoon Rest
Resin, 10"L x 3.2"W x 2.36"H
Tortoise 1538, White 1539,
Blue 9972, Orange 9997, Green 9998

LIGHT WEIGHT
& DISHWASHER
SAFE

MAD FOR METALLICS

Serve your side dishes in durable style with our range of metal serving accessories in an assortment of fantastic finishes.

Pista Round Dish
1136 Cast Aluminum
6.4"D x 1.4"H

Pista Casserole
1137 Cast Aluminum
8.5"L x 6"W x 1.7"H

Cruda Pot with Lid
1273 Stainless Steel/Brass
4.33" L x 2.75" H

Cruda Bowl
1274 Stainless Steel/Brass
5.32"D x 1.38"H

Lyon Oval Bowl
1276 Inside - Stainless Steel
Outside - Copper
4.92" L x 1.48" H

Lyon Oval Casserole Bowl
1275 Inside - Stainless Steel
Outside - Copper
7.2" L x 5.5" W x 1.05" H

Lyon Round Bowl
1277 Inside - Stainless Steel
Outside - Copper
3.5" L x 2.1" H

Mista Round Bowl
1279 Stainless Steel/Brass
4" L x 2" H

Mista Casserole
1278 Stainless Steel/Brass
6.5" L x 5" W x 1.25" H

Mista Square Bowl
1280 Stainless Steel/Brass
4.5" L x 1.75" H

Mista Platter
1135 Stainless Steel/Brass
11.8" L x 8.27" W x 1.6" H

Mozza Rectangular Bowl
1134 Stainless Steel/Brass
5.7" L x 3.75" W x 1.78" H

Mozza Round Bowl
1133 Stainless Steel/Brass
7.1" D x 1.78" H

Reiss Rocks
See Page 57

Garda Large Snack Plate
1281 Stainless Steel
11" L x 8.5" W

Garda Small Snack Plate
1282 Stainless Steel
7.5" L x 5.75" W

GARDA

Dishwasher safe tumbled stainless steel
for a vintage feel with easy clean up.

Garda Medium Snack Bowl
1283 Stainless Steel
5" D x 1.25" H

Garda Small Snack Bowl
1284 Stainless Steel
3.5" D x 1.25" H

Garda Taco Holder
8168 Stainless Steel
9"L x 4.25"W x 2"H

Bistro Fry Basket Small Vintage Silver
8258 Stainless Steel
3.1" L x 2.1" W x 3.8" H

Bistro Fry Basket Large Vintage Silver
8259 Stainless Steel
3.9" L x 2.7" W x 4.1" H

Modern Fry Basket Large Vintage Silver
8285 Stainless Steel
4.5" D x 3.7" H

POLISHED TREASURES

A pop of gold or silver adds an elegant touch to any table top.

Jerome Bowl Large Gold
2518 Aluminium
13.5"D x 4.25"H

Jerome Bowl Medium Gold
2517 Aluminium
9"D x 2.75"H

Not Shown:
Jerome Bowl Small Gold
2515 Aluminium
4.75"D x 2"H

Bombay Bowl Small Vintage Gold
8286 Stainless Steel
7.9"D x 3.5"H

Bombay Bowl Medium Vintage Gold
8287 Stainless Steel
9.8"D x 4.25"H

Bombay Bowl Large Vintage Gold
8288 Stainless Steel
11.8"D x 5.5"H

Montenegro Bowl Medium Gold
2521 Stainless Steel
5.1"D x 2"H

Montenegro Bowl Small Gold
2520 Stainless Steel
3.14"D x 1.2"H

Montenegro Bowl Large Gold
2522 Stainless Steel
7.3"D x 2.5"H

Gala Oval Basket
1272 Gold Plated Stainless Steel
16"L x 7"W x 5"H

FROM BACKYARD TO BUFFET AND BEYOND

Montenegro Bowl Small Silver
2523 Stainless Steel
3.14"D x 1.2"H

Montenegro Bowl Medium Silver
2524 Stainless Steel
5.1"D x 2"H

Montenegro Bowl Large Silver
2525 Stainless Steel
7.3"D x 2.5"H

a. Jerome Bowl Large Silver
2511 Aluminium
13.5"D x 4.25"H

b. Jerome Bowl Small Silver
2509 Aluminium
4.75"D x 2"H

Not Shown:
Jerome Bowl Medium Silver
2510 Aluminium
9"D x 2.75"H

a.

b.

d.

THE PERFECT CANDY BOWL

c.

c. Jerome Bowl Medium Charcoal
2513 Aluminium
9"D x 2.75"H

d. Jerome Bowl Small Charcoal
2512 Aluminium
4.75"D x 2"H

Not Shown:
Jerome Bowl Large Charcoal
2514 Aluminium
13.5"D x 4.25"H

GLAMOUR IS SERVED

Cordoba Tray
Stainless Steel
Small 8296 - 12"L x 5"W x 1"H
Medium 9295 - 13.8"L x 7.8"W x 1"H
Large 8294 - 17"L x 9"W x 1"H

Cordoba Ice Bucket
8293 Stainless Steel
5.9"D x 5.9"H

Sangresso Bottle Cooler
8187 Stainles Steel
11.8"D x 7.8"H

Sangresso Footed Bowl Small
8184 Stainless Steel
6"D x 3"H

Sangresso Footed Bowl Large
8185 Stainless Steel
9.8"D x 5"H

SANGRESSO

Curved statements in high glass stainless steel
that belong in all upscale settings.

Veneto Tumbler Green
See Page 44

Sangresso Round Tray
8186 Stainless Steel
12.5"D x 1.5"H

SPLENDIDO

Serving small bites in colorful style. These bright, handblown glass platters, plates and small snack vessels will keep your guests asking for more.

Splendido Tall Bowl White
2633 Glass
3.5"D x 2"H - 4 oz.

Splendido Bowls
Glass 2.5"D x 1.2"H - 2 oz.
White 2625, Lemon 2623, Cobalt 2626
Orange 2624, Lime 2628, Aqua 2627

Splendido Small Plate
2629 Glass
3.75"D x 0.59"H

Splendido Medium Plate
2631 Glass
7"D x 0.78"H

Splendido Round Platter
2630 Glass
13"D x 0.59"H

Splendido Rectangular Platter
2632 Glass
6.7"W x 12.5"L x 0.78"H

Splendido Rectangular Bowls
Glass 3.75"W x 5.1"L x 1.2"H - 4.3 oz.
White 2636, Smoke 2637, Orange 2638, Aqua 2639

Splendido Square Plate White
2640 Glass
3.15"W x 3.15"L x 0.4"H

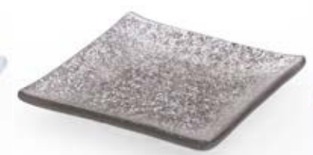

Splendido Square Plate Smoke
2641 Glass
3.15"W x 3.15"L x 0.4"H

Splendido Square Plate Orange
2642 Glass
3.15"W x 3.15"L x 0.4"H

Splendido Square Plate Aqua
2643 Glass
3.15"W x 3.15"L x 0.4"H

Splendido Square Bowls
Glass 3.5"W x 3.5"L x 1.2"H - 4 oz.
Aqua 2647, White 2644,
Smoke 2645, Orange 2646

IMPRESA

Fabulous swirls of color adorning each unique piece.
Spice up any setting with this truly special collection.

Impresa Small Bowl Teal
2610 Glass
4"D x 2"H - 7 oz.

Impresa Medium Bowl Teal
2609 Glass
6"D x 2.7"H - 16 oz.

Impresa Large Bowl Teal
2613 Glass
10"D x 4.75"H - 64 oz.

Impresa Cake Plate
Glass 13"D x 4"H
Teal 2615 // Tan 2622

Impresa Platter Teal
2611 Glass
12"D x 1"H

Impresa Large Bowl Tan
2620 Glass
10"D x 4.75"H - 64 oz.

a. Impresa Small Bowl Tan
2618 Glass
4"D x 2"H - 7 oz.

b. Impresa Medium Bowl Tan
2616 Glass
6"D x 2.7"H - 16 oz.

c. Impresa Platter Tan
2619 Glass
12"D x 1"H

Impresa Footed Bowl
Glass 10"D x 7.5"H - 64 oz.
Teal 2614 // Tan 2621

GLASSWARE GOODIES

Versatile glassware that is useful whether it's a snack or a sip!

Forest Snack Set of 3
5588 Glass
3.5"D x 8"H - 6 oz.
3 compartments

Pyramo
5712 Glass
4.5" D x 8" H
2, 3, 6, 8 oz.
4 compartments

Bia DOF
5702 Glass
3.5"D x 3.5"H - 9 oz.

Bollo Snack Set
5711 Glass
Lid: 4.5"D x 2.5"H
Base: 4.5"D x 4.5"H
12 oz.

BEST BARWARE EVER

Raise a glass and cheer!

VENETO

Italian high design brought to your tabletop, *pronto*.

We love the modern simplicity of this brand new collection. Delicate but durable, this is quite possibly the perfect water glass to add a touch of WOW to any tablescape.

Veneto Tumbler Orange
5557 Glass
3.07"D x 4.88"H - 16 oz.

Veneto Tumbler Blue
5555 Glass
3.07"D x 4.88"H - 16 oz.

Veneto Tumbler Green
5558 Glass
3.07"D x 4.88"H - 16 oz.

Veneto Tumbler Red
5556 Glass
3.07"D x 4.88"H - 16 oz.

Tuscan Rocks Olive
5686 Glass
3.5"D x 4.0"H - 8 oz.

Tuscan Rocks Aqua
5687 Glass
3.5"D x 4.0"H - 8 oz.

Tuscan Rocks Amber
5692 Glass
3.5"D x 4.0"H - 8 oz.

Tuscan Rocks Purple
5691 Glass
3.5"D x 4.0"H - 8 oz.

NONNA, TUSCAN, & BISTRO

Invite a touch of vintage charm to your next cocktail gathering!

Cordoba Tray Small*
8296 Stainless Steel
12"L x 5"W x 1"H

** Also available in Medium and Large*
See Page 34

SIP IN STYLE

Sienna Tray
3565 Wood/Stainless Steel
20.1"W x 8.3"L x 2"H

Nonna Tumbler
5678 Glass
3.4"D x 5.82"H - 14 oz.

Nonna Rocks
5677 Glass
3.4"D x 4.13"H - 9 oz.

Tuscan Tumbler
5680 Glass
3.4"D x 5.0"H - 12 oz.

Tuscan Rocks
5679 Glass
3.5"D x 4.0"H - 8 oz.

Bistro Tumbler
5676 Glass
3.5"D x 5.82"H - 14 oz.

Bistro Rocks
5675 Glass
3.4"D x 4.13"H - 9 oz.

NASSAU

A touch of the tropics brought to your bar and tabletop.

Nassau Rocks Red
5331 Glass
3.3"D x 4.1"H - 16 oz.

Nassau Martini Red
5330 Glass
5.1"D x 7.1"H - 15 oz.

Nassau Highball Red
5329 Glass
3.5"D x 6.0"H - 19 oz.

Nassau Rocks Aqua
5191 Glass
3.3"D x 4.1"H - 16 oz.

Nassau Martini Aqua
5193 Glass
5.1"D x 7.1"H - 15 oz.

Nassau Highball Aqua
5192 Glass
3.5"D x 6.0"H - 19 oz.

Hand chiseled facets of crystal clear glass make this one a winner!

Diamante Tumbler
5446 Glass
4.6"D x 5.2"H - 8 oz.

PONZA & DIAMANTE

Swirl, sparkle and shine with our most fabulous glass launches ever!

Ponza Tumbler Green
5439 Glass
3.1"D x 4.3"H - 10 oz.

Ponza Tumbler Smoke
5438 Glass
3.1"D x 4.3"H - 10 oz.

VENETIAN

The best of Murano
delivered to your tabletop.

Venetian Martini Clear
5501 Glass
5"D x 7.5"H - 8 oz.

Venetian Martini Blue
5502 Glass
5"D x 7.5"H - 8 oz.

Venetian Martini Green
5503 Glass
5"D x 7.5"H - 8 oz.

Venetian Tumbler
5500 Glass
3"D x 5"H - 18 oz.

ABSTRACT

Add some color and contour to your cocktails.

Abstract Rocks Red*
5007 Glass
3.6"D x 4"H - 11 oz.

Abstract Rocks Orange*
5006 Glass
3.6"D x 4"H - 11 oz.

Abstract Rocks Green*
5005 Glass
3.6"D x 4"H - 11 oz.

Abstract Rocks Blue*
5004 Glass
3.6"D x 4"H - 11 oz.

Abstract Rocks Black*
5448 Glass
3.6"D x 4"H - 11 oz.

**Abstract glassware produced on a special order basis; please inquire*

FAIRFAX, MONTAROSA & MAXIMILLIAN

Perfectly weighted barware that steals any show. Fabulous textures that sparkle and shine. The ultimate addition to any Food and Beverage operation.

Maximillian Highball
5276 Glass
2.7"D x 5.5"H - 13 oz.

Maximillian DOF
5275 Glass
3.3"D x 3.8"H - 10 oz.

Fairfax Highball
5278 Glass
2.7"D x 5.5"H - 13 oz.

Fairfax DOF
5277 Glass
3.3"D x 3.8"H - 10 oz.

Montarosa Highball
5280 Glass
2.7"D x 5.5"H - 13 oz.

Montarosa DOF
5279 Glass
3.3"D x 3.8"H - 10 oz.

MARBELLA

Handblown swirls of colored glass ensure that no two glasses are identical. Each one is a piece of art!

Marbella Rocks Red
5451 Glass
3.7"D x 4.1"H - 14 oz.

Marbella Rocks Black
5455 Glass
3.7"D x 4.1"H - 14 oz.

Marbella Rocks Blue
5453 Glass
3.7"D x 4.1"H - 14 oz.

CRAZY

Colorful glassware with a twist.

Crazy Rocks Red
5057 Glass
3.5"D x 4.3"H - 10 oz.

Crazy Rocks Black
5467 Glass
3.5"D x 4.3"H - 10 oz.

Crazy Rocks Blue
5055 Glass
3.5"D x 4.3"H - 10 oz.

Lyford Rocks Blue
5151 Glass
3"D x 4.25"H - 11 oz.

TIERRA

Wine, water or just about any sip of choice will look like a million bucks.

Tierra Tumbler Red
6003 Glass
2.5"D x 4"H - 12 oz.

DON'T BE AFRAID TO MIX & MATCH GLASSWARE

Tierra Tumbler Blue
6000 Glass
2.5"D x 4"H - 12 oz.

Tierra Tumbler Yellow
6001 Glass
2.5"D x 4"H - 12 oz.

Tierra Tumbler Green
6002 Glass
2.5"D x 4"H - 12 oz.

Tierra Tumbler Large Green
6006 Glass
2.75"D x 4.75"H - 17 oz.

Tierra Tumbler Large Blue
6004 Glass
2.75"D x 4.75"H - 17 oz.

Tierra Tumbler Large Yellow
6005 Glass
2.75"D x 4.75"H - 17 oz.

Tierra Tumbler Large Red
6007 Glass
2.75"D x 4.75"H - 17 oz.

CRYSTAL QUALITY

FUN SHAPES THAT SILENTLY STEAL THE SHOW

Bia DOF
5702 Glass
3.5"D x 3.5"H - 9 oz.

Frosted Shot Glass
5090 Glass
1.9"D x 3.9"H - 1.2 oz.

Santos Tumbler
5591 Glass
3.7" D x 5.2" H - 12 oz.

PARISIAN

A classic collection that combines modern design with old world charm... seamlessly.

Parisian Tumbler Emerald
5603 Glass
3.0"D x 5.0"H - 14 oz.

Parisian Tumbler Purple
5604 Glass
3.0"D x 5.0"H - 14 oz.

STARLIGHT

Finally, the star has arrived. Solid, sturdy and did we mention... dishwasher safe?

Starlight Tumbler
Glass, 4"D x 3.5"H - 10 oz.
a. 5271 Olive b. 5269 Coffee c. 5272 Ruby d. 5270 Magenta e. 5273 Smoke

TORTOISE

A classic pattern on two essential sized glasses. These are anything but basic.

Tortoise Highball
5288 Glass
2.95"D x 6"H - 16 oz.

Tortoise Rocks
5287 Glass
3.2"D x 4.25"H - 10 oz.

FIERA & REISS

Lead-free crystal silhouettes in simple yet intriguing shapes that will stand out like no other.

Fiera Tumbler
6008 Glass
3.38"D x 4"H - 13.5oz.

Fiera Stemless Flute
6009 Glass
2.44"D x 6"H - 10oz.

Reiss Rock
8516 Glass
3.2"D x 5.4"H - 15oz.

Reiss Flute
8515 Glass
2.4"D x 6.4"H - 9.7oz.

Reiss Tumbler
8517 Glass
3.7"D x 5.3"H - 21oz.

SORRENTO

As refined and picturesque as its namesake.

Sorrento Rocks
5440 Glass
3.4"D x 4.3"H - 14.7 oz.

Sorrento Tumbler
5441 Glass
3.2"D x 5.7"H - 19.3 oz.

Sorrento Goblet
5444 Glass
3.5"D x 9.6"H - 12.7 oz.

Sorrento Coupe
5442 Glass
4.7"D x 7.8"H - 7 oz.

Sorrento Flute
5443 Glass
2.4"D x 10.8"H - 8.8 oz.

DRESS UP ANY COCKTAIL WITH A STUNNING SERVING TRAY!

Jaipur Tray Red
7660 Wood/Resin
17.25"L x 10.25"W x 1.5"H

CRYSTA

Austrian crystal at its very best.

Sangresso Round Tray
8186 Stainless Steel
12.5"D x 1.5"H

Crysta Coupe
8514 Crystal
4.7"D x 6.8"H -11.5 oz.

Crysta Highball
5420 Crystal
3.2"D x 5.0"H - 14 oz.

Crysta Shot
5484 Crystal
1.75"D x 2.25"H - 2 oz.

Crysta Rocks
5419 Crystal
3.6"D x 3.4"H - 10 oz.

a. Crysta Cordial
5483 Crystal
2.5"D x 7.8"H - 3.5 oz.

b. Crysta Flute
5482 Crystal
2.9"D x 10.3"H - 8 oz.

c. Crysta Red Wine
5421 Crystal
4.2"D x 9.2"H - 21 oz.

d. Crysta White Wine
5659 Crystal
3.5"D x 8.5"H - 13 oz.

TIKI

And now for something a little different.

Tiki Skull Tumbler
6010 Glass
5.9"D x 4.2"H
23 oz

Tiki Blue Guy Tumbler
6013 Ceramic
3"D x 6.8"H
20 oz

Tiki Calm Tumbler
6011 Ceramic
2.4"D x 6.5"H
13.5 oz

Tiki Maka Tumbler
6015 Ceramic
3.8"D x 6"H
19 oz

Tiki Gumba Tumbler
6012 Ceramic
3.7"D x 7"H
21.6 oz

Tiki Chill Guy Tumbler
6018 Ceramic
2.75"D x 6.8"H
23 oz

Tiki Barrel Tumbler
6017 Ceramic
2.7"D x 6.9"H
15 oz

Tiki Grumpy Tumbler
6016 Ceramic
3.2"D x 6.1"H
13.5 oz

THE FINER TOUCHES

Essentials to impress

Milano Footed Snack Bowl Gold
5240 Stainless Steel
3.5"D x 2"H

Milano Footed Snack Bowl Silver
5241 Stainless Steel
3.5"D x 2"H

Milano Footed Snack Bowl Bronze
5242 Stainless Steel
3.5"D x 2"H

Genova Footed Snack Bowl Silver
5147 Stainless Steel
4"D x 3.5"H

Genova Rectangular Tray Gold
5168 Stainless Steel
7.5"L x 4"W x 0.5"H

Genova Footed Snack Bowl Vintage Gold
8183 Stainless Steel
4"D x 3.5"H

Milano Footed Snack Bowl Vintage Gold
8182 Stainless Steel
3.5"D x 2"H

Puglia Rectangle Tray Vintage Gold
8179 Stainless Steel
11"L x 5"W x 0.5"H

Puglia Snack Bowl
8175 Stainless Steel
5.5"D x 3.25"H

A touch of glitz and glam to make your setting that much more special.

Puglia Small Square Tray
8176 Stainless Steel
6"L x 6"W x 0.5"H

Genova Rectangular Tray Silver
5243 Stainless Steel
7.5"L x 4"W x 0.5"H

ELEVATING STANDARDS

Add sleek sophistication to your next social occasion.

Combine Shot and Caviar Set for a Special Presentation!

Vienna Caviar Set
5165 Stainless Steel/ Glass
5"D x 3"H

Vienna Shot Set
5166 Stainless Steel/ Glass
10"D x 8"H

Puglia Small Square Tray
8176 Stainless Steel
6"L x 6"W x 0.5"H

DOUBLE WALL MEANS NO CONDENSATION

Jupiter Ice Bucket
8064 Stainless Steel
6.8"D x 7.5"H

Vienna Bottle Chiller
5167 Stainless Steel
15.3"D x 9.4"H

Fiji Stirrer (S/4)
8281 Brass/Stainless Steel
7.5"L x 0.5"W x 0.1"H

Fiji Cake Set
8275 Aluminum/Stainless Steel
12"L x 2.5"W x .5"H

Fiji Salad Server
8276 Aluminum/Stainless Steel
12"L x 2.5"W x .5"H

FIJI

Stunning and understated metallic accents to highlight any snack or cocktail.

Fiji Spoon (S/4)
8278 Brass/Stainless Steel
4.5"L x 1"W x 0.1"H

Fiji Fork (S/4)
8279 Brass/Stainless Steel
4.5"L x 0.5"W x 0.1"H

Fiji Spreader (S/4)
8277 Brass/Stainless Steel
5.5"L x 1"W x 0.1"H

Fiji Pick (S/4)
8280 Brass/Stainless Steel
4.5"L x 0.5"W x 0.1"H

Nordic Lazy Susan
3667 Acacia Wood
14" L x 14" W x 2" H

NORDIC

Timeless and elegant wood pieces
with a variety of uses.

Nordic Rectangular Tray
3668 Acacia Wood
20" L x 7.50" W x 1" H

Nordic Fruit Bowl
3669 Acacia Wood & Iron
10" D x 8" H

Nordic Footed Platter
3670 Acacia Wood & Iron
12" D x 5.25" H

Nordic Snack Set
3674 Acacia Wood & Slate
16.6" L x 9" W x 0.75" H

SAN REMO & TOSCANA

Elegant serving and snack trays that elevate any small bite.

San Remo Lazy Susan
1051 Marble / Pearl Inlay
13.78"D x 1.18"H

San Remo Snack Board
1054 Marble / Pearl Inlay
14.17" L x 7.09" W x 0.59" H

Toscana Lazy Susan
1052 Marble / Brass Inlay
13.78"D x 1.18"H

Toscana Snack Board
1053 Marble / Brass Inlay
14.17" L x 7.09" W x 0.59" H

Juliet Snack Board
1050 Agate
13.78" L x 6.89" W x 0.39" H

Venetian Bowl Large
1286 Buffalo Horn
8.5" L x 8.5" W x 3" H

Venetian Bowl Small
1287 Buffalo Horn
6" L x 6" W x 2" H

KEEP IT COVERED

Domes, domes and more domes!

Capri Dome Small
6665 Polycarbonate
8"D x 6"H

Capri Dome Large
6666 Polycarbonate
10"D x 7"H

Capri Dome Extra Large
6667 Polycarbonate
12"D x 9"H

Capri Dome Mini
6668 Polycarbonate
4"D x 4"H

Geneva Snack Platter with Dome Small
8222 Marble/Glass
7"D x 0.75"H (without dome)
7"D x 6.75"H (with dome)

Geneva Snack Platter with Dome Large
8223 Marble/Glass
11"D x 0.75"H (without dome)
11"D x 7.75"H (with dome)

Bel Air Dome
6815 Polycarbonate
6.5"D x 7"H

ATHENIAN

Refined marble accents to showcase small snacks of all kinds.

Athenian Dish White
1056 Marble
5" D x 0.98" H

Athenian Dish Black
1057 Marble
5" D x 0.98" H

Gramercy Small Tray
Black 3843 Faux Leather
Cream 3842 Faux Leather
7.6"L x 4.6"W x .63"H

GRAMERCY

Our finely crafted faux stingray trays and boxes take the meaning of multi-purpose to new levels.

Gramercy Box Black
3847 Faux Leather
15"L x 11.3"W x 3.0"H

Gramercy Medium Tray Black
3841 Faux Leather
11.5"L x 4.6"W x .63"H

Gramercy Large Tray Black
3845 Faux Leather
17.4"L x 13.1" W x 1.0"H

Gramercy Box Cream
3846 Faux Leather
15"L x 11.3"W x 3.0"H

Gramercy Medium Tray Cream
3840 Faux Leather
11.5"L x 4.6"W x .63"H

Gramercy Large Tray Cream
3844 Faux Leather
17.4"L x 13.1" W x 1.0"H

Nothing beats the look of leather when you want to make an impression. From the bar to banquets, guest rooms and beyond... Gramercy wears so many hats and will be your go-to presentation piece for sure.

Gramercy High Tray Black
3851 Faux Leather
11.6"L x 7"W x 2"H

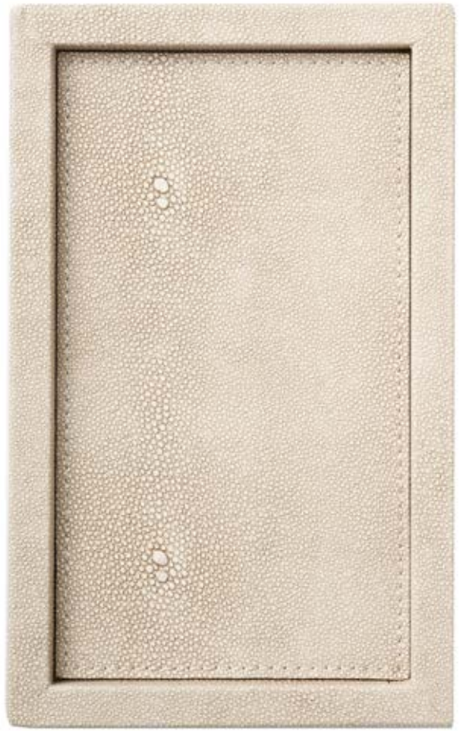

The perfect collection for coffee service! Serve honey, flatware, napkins, cutlery and more!

Gramercy Cup Caddy Black
3849 Faux Leather
5.2"L x 5.2"W x 7.3"H

Gramercy Multi Cup Caddy Black
3853 Faux Leather
10.8"D x 15.2"H

Gramercy Large Caddy Black
3855 Faux Leather
17.5"L x 6.3"W x 4"H

TIME TO GET COOKING

TERRA COOKWARE

Go from oven to table with ease with our stunning collection of 18/8 gauge stainless steel Terra series. Safe on all heating elements, including induction, electric, gas, halogen, and vitro — a chef's dream come true!

Terra 6 Qt Casserole w/Lid
8371 Stainless Steel
11.8" D x 3" H

Terra 3 Qt Pot w/Lid
8372 Stainless Steel
7.8" D x 3.7" H

Terra Roaster
8378 Stainless Steel
14.5" L x 12" W x 2.75" H

Terra 6 Qt Pan w/Lid
8377 Stainless Steel
11.8" D x 3.3" H

Terra 6 Qt Pot w/lid
8373 Stainless Steel
9.4" D x 4.9" H

Terra 4 Qt Casserole w/Lid
8370 Stainless Steel
11" D x 2.5" H

Terra 6 Qt Casserole Insert
Fits: 8371 & 8377
8376 Stainless Steel
11.8" D x 3" H

Terra 6 Qt Pot Insert
Fits: 8373
8374 Stainless Steel
10" D x 4.5" H

Fonda Lid Holder
9546 Stainless Steel

SIENNA COOKWARE

Cast Aluminum: the lighter side of cooking. 60% lighter than cast iron, stackable, chip resistant, induction ready, dishwashser and oven safe — an absolute no brainer!

Sienna 7 Qt Round Casserole w/ Lid Grey
1140 Cast Aluminum
11"D x 5"H

Sienna 7 Qt Round Casserole w/ Lid Red
5575 Cast Aluminum
11"D x 5"H

Sienna 6.5 Qt Oval Casserole w/ Lid Aqua
1271 Cast Aluminum
12" L x 9.8" W x 4.7" H

Gibraltar Placemat Slate
9023 Vinyl
12.0"L x 16.0"W

Gibraltar Placemat Bronze
9024 Vinyl
12.0"L x 16.0"W

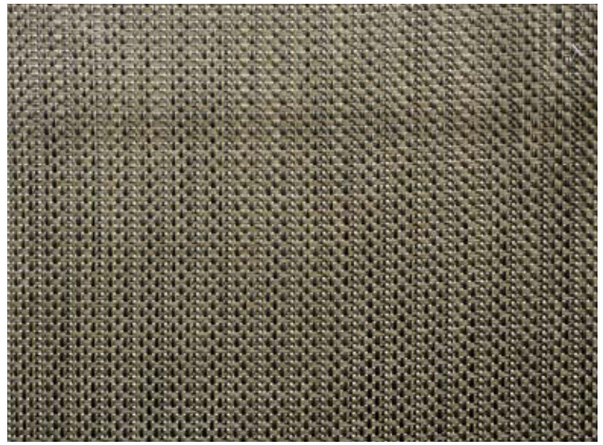

Firenze
Stainless Steel
9456 Salad Fork - 7.3"L
9453 Dinner Fork - 8"L
9450 Dinner Knife - 9.43"L
9460 Salad Knife - 7.24"L
9451 Dinner Spoon - 7.9"L
9454 Teaspoon - 6.25"L
9449 EuropeanTeaspoon - 5.5"L

Fonda Mini Oval Cocotte White
8331 Cast Iron
5"L x 3.7"W x 2"H - 9 oz.

Fonda Mini Oval Cocotte Green
8330 Cast Iron
5"L x 3.7"W x 2"H - 9 oz.

TEAK IS THE NEW BLACK

Long lasting & stunning for years to come.

Bravo Large Rectangular Chop Board
1118 Teak
24" L x 18" W x 1.5"H

Bravo Medium Rectangular Chop Board
1119 Teak
20" L x 15" W x 1.5"H

BRAVO

MARAIS

Marais Large Rectangular Chop Board
1122 Teak
24" L x 18" W x 1.5" H

Marais Medium Rectangular Chop Board
1121 Teak
20" L x 14" W x 2.5"H

Marais Round Chop Board
1120 Teak
18" L x 18" W x 2.1"H

Prima Large Round Chop Board
1257 Teak
22" L x 22" W x 0.5"H

Prima Medium Round Chop Board
1256 Teak
14" L x 14" W x 0.5"H

PRIMA

Prima Large Rectangular Chop Board
1258 Teak
41"L x 7.5" W x 0.5"H

Prima Medium Rectangular Chop Board
1259 Teak
31"L x 7.5"W x 0.5"H

PORCELAIN WHITEWARE

Beautiful porcelain in a variety of sizes for a variety of uses

MIYA

Miya Plate Small
7603 Porcelain
9.9"L x 5.9"W x 0.9"H

Credo Plate Large
7996 Porcelain
7.9"D x 4.3"H

Credo Plate Small
7998 Porcelain
4.3"D x 2.8"H

Mimi Dish Large
7746 Porcelain
5"D x 1"H - 5 oz.

Mimi Dish Small
7748 Porcelain
3"D x 1"H - 2 oz.

Mimi Dish Medium
7747 Porcelain
4"D x 1"H - 4 oz.

Mangia Snack Plate
7543 Porcelain
13.5"L x 4.5"W x 0.39"H

With a wide selection of designs, shapes and sizes, our collection of white porcelain highlights your sophisticated taste.

Arch Bowl
7503 Porcelain
11"L x 6.5"W x 4.5"H

POSITIVELY PORCELAIN

Sola Bowl Large
7751 Porcelain
4.8"D x 2"H - 10 oz.

Sola Bowl Medium
7750 Porcelain
3.5"D x 1.5"H - 4 oz.

Sola Bowl Small
7749 Porcelain
3"D x 1.3"H - 2 oz.

Kyoto Platter Large
7699 Porcelain
12.5"L x 5.5"W x 4.3"H

Kyoto Platter Small
7698 Porcelain
8.5"L x 4"W x 3"H

KYOTO

Classic color does not have to mean classic design

Kyoto Snack Bowl Small
7700 Porcelain
4"D x 5"H

Kyoto Snack Bowl Medium
7701 Porcelain
5.5"D x 7"H

Marco Banquet Platter
7752 Porcelain
14"L x 8.8"W x .8"H

Marco Banquet Baking Dish
7768 Porcelain
14.2"L x 8.7"W x 2.78"H

MARCO

Marco Bowl Medium
7992 Porcelain
10.7"L x 8.9"W x 2.4"H

Costa Platter
7612 Porcelain
12.3"L x 9.1"W x 2.1"H

LOVING OUR SMALLS

Prima Spoon
8075 Stainless Steel
17.8"L x 6"W x 0.2"H

Mini Prima Spoon
8257 Stainless Steel
5.8"L x 1.2"W x 1.1"H

Pista Spoon
8072 Stainless Steel
5.8"L x 1.8"W x 1.8"H

Buckingham Spoon
8056 Stainless Steel
4.3"L x 0.5"W x 0.4"H

Jordi Mini Fork
7677 Stainless Steel
5.5"L x 0.75"W x 0.25"H

Jordi Mini Spoon
7676 Stainless Steel
4.5"L x 1"W x 0.25"H

Hiro Spoon
7670 Porcelain
5"L x 1.7"W x 1.8"H

Soho Cup
7522 Porcelain
3.15"D x 4.25"H - 8.8 oz.

Jurgen Mini Dish
7668 Porcelain
4"L x 4"W x 2.2"H

Lars Mini Square Bowl
7669 Porcelain
3.3"L x 3.3"W x 2"H

Moon Bowl
7534 Porcelain
2.2"D x 6"H

Casa Bowl
7510 Porcelain
5.0"L x 2.9"W x 2.5"H - 3.5 oz.

Brio Bowl
7509 Porcelain
3.8"L x 2.3"W x 1.5"H - 1 oz.

Devon Spoon
7570 Porcelain
3.8"L x 2.2"W x 2.2"H - .75 oz.

Momo Bowl
7533 Porcelain
3.0"D x 1.3"H - 2 oz.

Vigo Dish
7568 Porcelain
2.8"D x 1.0"H - 1 oz.

Crema Dish
7515 Porcelain
4.0"L x 2.7"W x 0.8"H - .75 oz.

Pana Dish
7571 Porcelain
2.7"L x 2.2"W x 1.8"H - 1.2 oz.

Luna Dish
7528 Porcelain
3.5"L x 2.1"W x 1.5"H - 1 oz.

Alba Mini Cone
7673 Porcelain
1.75"D x 3"H - 1.5 oz.

Tali Mini Cup
7672 Porcelain
2"D x 2.25"H - 3 oz.

Maren Mini Platter
7675 Porcelain
4"D x 2"H

Thor Mini Bowl
7674 Porcelain
2.75"D x 1"H - 2.5 oz.

Nadja Mini Coupe
7671 Porcelain
2"D x 2.3"H - 3 oz.

Castile Dish
7511 Porcelain
2.7"D x 1.7"H - 2.8 oz.

Beso Bowl
7506 Porcelain
2.9"D x 1.5"H - 2 oz.

Miso Dish
7532 Porcelain
4.2"L x 4.2"W x 4.5"H - 2 oz.

Pana Bowl with Spoon
7536 Porcelain
2.9"L x 2.1"W x 3.7"H - 2 oz.

Frida Bowl
7597 Porcelain
2.8"L x 4.3"W x 1.9"H

Tito Bowl
7557 Porcelain
2.7"D x 1.3"H - 2.3 oz.

Rosa Bowl
8041 Porcelain
4"D x 2.7"H - 6 oz.

Arrow Bowl
7505 Porcelain
3.2"L x 2.8"W x 1.0"H - 2.8 oz.

Arch Cup
Large: 7501 Porcelain
5.3"L x 3.5"W x 3.0"H - 6 oz.
Small: 7502 Porcelain
3.0"L x 2.2"W x 1.7"H - 2 oz.

Gusto Bowl
7598 Porcelain
4.8"L x 2.5"W x 2.2"H

Napoli Narrow Platter Small
7692 Porcelain
14.5"L x 4"W x 1"H

NAPOLI

OK, we admit it... this collection was named after our love for Italian food.

Entree Bowl Small
7769 Porcelain
5.5"D x 2.3"H

Napoli Narrow Platter Large
7693 Porcelain
18"L x 5"W x .8"H

a. Trumpet Bowl Small
7575 Porcelain
8.0"D x 4.1"H

b. Trumpet Bowl Large
7563 Porcelain
14.0"D x 6.3"H

a. Stretch Bowl Large
7554 Porcelain
13.8"L x 10.0"W x 5.0"H

b. Stretch Bowl Medium
7555 Porcelain
8.0"L x 10.5"W x 3.3"H

c. Stretch Bowl Small
7556 Porcelain
6.0"L x 4.5"W x 2.5"H

d. Easy Bowl
7520 Porcelain
5.0"L x 5.0"W x 3.3"H

EVERY SIZE & EVERY SHAPE FOR EVERY MEAL

Lucy Snack Bowl
7601 Porcelain
11.1" D x 8.7" W x 1.5" H

a. Lunchtime Bowl Medium
7531 Porcelain
8.0"L x 8.0"W x 4.5"H

b. Lunchtime Bowl Small
7529 Porcelain
4.0"L x 4.0"W x 2.3"H

THE BEST BASICS EVER

Bistro Creamer Small
7735 Porcelain
2"D x 2"H in - 1 oz.

Fluted Tall Ramekin
7758 Porcelain
4"D x 2.8"H in - 10 oz.

Modi Snack Bowl
7542 Porcelain
9"L x 2.9"W x 1.4"H

Triza Snack Bowl
7541 Porcelain
9"L x 2.9"W x 1.3"H

Trocco Snack Bowl
7540 Porcelain
8"L x 7.5"W x 3"H

Hudson Egg Crate Large
7703 Porcelain
12.8"L x 4.3"W x 1.5"H

Hudson Egg Crate Small
7704 Porcelain
3.25"L x 5.5"W x 1.25"H

Saigon Bowl Large
7719 Porcelain
8.6"D x 2.3"H

Gina Bowl
7722 Porcelain
10"D x 1.5"H

BOWLS, BOWLS, MORE BOWLS!

Cone Bowl Large
7512 Porcelain
9.0"D x 5.3"H

Cone Bowl Medium
7513 Porcelain
7.0"D x 4.0"H

Cone Bowl Small
7514 Porcelain
4.0"D x 2.5"H

Rotunda Bowl Small
7546 Porcelain
8.2"D x 4.0"H

Rotunda Bowl Large
7544 Porcelain
13.2"D x 5.0"H

Mona Bowl Small
7679 Porcelain
12.5"D x 5.6"H

Palm Beach Coupe Platter
7723 Porcelain
14"D x 3.25"H

Palm Beach Small Coupe Plate
7725 Porcelain
10"D x 2.25"H

Palm Beach Large Coupe Plate
7724 Porcelain
12"D x 2.25"H

Beverly Plate Large
7607 Porcelain
10"L x 6.9"W x 13"H

Beverly Plate Small
7606 Porcelain
7.8"L x 5.4"W x 1.2"H

Anna Round Large Plate
7729 Porcelain
12"D x 1"H

PLATES & PLATTERS

The perfect plates in sizes and shapes for every occasion.

Anna Oval Platter
7726 Porcelain
15"L x 10.25"W x 1.5"H

GUMDROP

So much fun. So stylish. And oh-so-sensible in any decor. Transform any sip, snack or meal into a fashion-forward moment with our colorful serving vessels made of super durable porcelain.

Gumdrop Espresso Cup Slate
8043 Porcelain
2.25"D x 2.1"H - 2.3 oz.

Gumdrop Espresso Cup Cobalt
8046 Porcelain
2.25"D x 2.1"H - 2.3 oz.

Gumdrop Espresso Cup Lime
8044 Porcelain
2.25"D x 2.1"H - 2.3 oz.

Gumdrop Espresso Cup Lemon
8045 Porcelain
2.25"D x 2.1"H - 2.3 oz.

Gumdrop Bowl Slate
8047 Porcelain
3.4"D x 1.8"H - 5 oz.

Gumdrop Bowl Cobalt
8050 Porcelain
3.4"D x 1.8"H - 5 oz.

Gumdrop Bowl Lime
8048 Porcelain
3.4"D x 1.8"H - 5 oz.

Gumdrop Bowl Lemon
8049 Porcelain
3.4"D x 1.8"H - 5 oz.

UNBREAKABLY YOURS

Melamine serving pieces in loads of sizes, shapes and colors

CONTESSA

Our most durable and functional (not to mention colorful) serving vessels designed for high volume (and high style) events. Dress up your food inside or out with our latest launch of Contessa banquet serving dishes.

Contessa Serving Bowl Grey
7620 Melamine
9"D x 4.1"H

Contessa Serving Bowl Blue
7621 Melamine
9"D x 4.1"H

Contessa Serving Bowl Green
7619 Melamine
9"D x 4.1"H

Contessa Serving Platter Grey
7616 Melamine
16"D x 2.1"H

Contessa Serving Platter Blue
7618 Melamine
16"D x 2.1"H

Contessa Serving Platter Green
7615 Melamine
16"D x 2.1"H

Swede Canape Platter
Melamine
Large - 1898 16" L x 6.2" W x 1.2" H
Medium - 1897 14" L x 5.7" W x 1" H
Small - 1896 8" L x 4.7" W x .7" H

SUSHI, APPETIZERS, FRUIT, HORS D'OEUVRES & MORE!

BANQUET SERVING ESSENTIALS

As indestructible and foolproof as you would ever want.

Swede Serving Platter Small
9703 Melamine
17.9"L x 11"W x 1"H

Swede Serving Platter Large
9700 Melamine
22.2"L x 14.4"W x 1"H

Swede Serving Platter Medium
9702 Melamine
19.3"L x 12.4"W x 1"H

SWEDE

Workhorse melamine serving vessels that will blend flawlessly into any banquet operation.

Swede Bowl Large
9705 Melamine
18.5"D x 5.5"H

Swede Bowl Small
9706 Melamine
9.5"D x 2.75"H

Swede Kyoto Bowl Large
1303 Melamine
5" L x 5.5" W x 6" H

Swede Kyoto Bowl Small
1302 Melamine
5" L x 4.5" W x 5" H

Swede Marco Bowl
1139 Melamine
15" L x 9" W x 2.5" H

Multi-purpose, clean-lined basics for everyday use.

Swede Flared Bowl Large
1895 Melamine
16" L x 16" W x 5.3" H

Swede Flared Bowl Small
1894 Melamine
12.5" L x 12.5" W x 4" H

PIA

Modern Scandinavian design and elegant style applied to unbreakable serving essentials.

Pia Cake Stand (S/2)
6517 Melamine
Large 14.75"L x 14.75"W x 7"H
Small 11.75"L x 11.75"W x 5.75"H

Pia Rectangular Dish Small
6515 Melamine
6"L x 9.8"W x 2.8"H

Pia Footed Bowl Large
6519 Melamine
14.3"L x 13.3"W x 6.8"H

NIKKO

The simplicity of Asian style brought to unbreakable basics.

Nikko Platter Large
Melamine 1892
20.8" L x 12.7" W x 1.1" H

Nikko Platter Medium
Melamine 1893
20.8" L x 6.3" W x 1.1" H

Nikko Snack Bowl Small
Melamine 1891
6.4" L x 6.4" W x 6.4" H

BEAUTIFUL BUFFETS

Mix, match and freshen things up

Sonoma Tray
3537 Wood
20"L x 14"W x 5.5"H

Napa Cake Plate
3538 Wood
12"D x 5"H

NATURALLY NAPA

The timeless beauty of natural wood never goes out of style.

Napa Bookshelf*
3665 Gun Metal/Mango Wood
30" L x 16" W x 86" H

Napa Serving Cart*
3643 Mango Wood
50" L x 27.5" W x 36" H
Can hold up to 600 lbs

TAKE YOUR DISPLAY TO NEW HEIGHTS!

Napa Dessert & Bar Cart
3666 Mango Wood
36" L x 21" W x 38" H
Each shelf can hold 40 lbs.

Our best selling cart - same sturdy lockable casters and elegant rounded corners, only smaller!

*These SKUs are produced on a special order basis; please inquire

THE NEW LOOK OF BUFFET

Napa Buffet Bowl
6189 Melamine
7"L x 7"W x 3"H

Napa Cube With Lid
3616 Wood
9.0"L x 9.0"W x 9.3"H

Napa Cube Stacker
3617 Wood
8.0"L x 8.0"W x 1.8"H

Napa Cube Buffet Tray
3618 Wood
21.0"L x 13.0"W x 2.0"H

Napa Cube 4 Compartment Tray
3619 Wood
15.0"L x 15.0"W x 0.75"H

Napa Cube Wide Shelf Long
3624 Wood
39.4"L x 13.8"W x 0.6"H

Napa Cube Wide Shelf Short
3622 Wood
31.5"L x 13.8"W x 0.6"H

Napa Cube Narrow Shelf Short
3621 Wood
31.5"L x 7.1"W x 0.6"H

Napa Cube Narrow Shelf Long
3623 | Mango Wood
39.4"L x 7.1"W x .6"H

Napa Cube Crossbar
3620 Wood
30.5"L x 4.50"H

Clean lines and modern silhouettes – build a look that is uniquely yours.

Napa Nesting Tray S/2
3536 Wood/Stainless Steel
Large: 11" W x 2.375" H

Napa Beverage Cooler
(Gastropan Sold Separately)
3576 Wood
22.4"L x 14.6"W x 5.7"H

Napa Nesting Cube (S/2)
3561 Wood
10.5"L x 13"W x 3"H

Napa Large Box
3542 Wood
13"L x 10.5"W x 3"H

Napa Small Box
3543 Wood
6.4"L x 10"W x 3"H

a. Tech Napa Stand Square
3523 Wood/Stainless Steel
8.25" L x 8.25" W x 2.75" H

b. Tech Napa Stand Rectangle
3524 Wood/Stainless Steel
14.0"D x 6.0"H

NATURAL WOOD GRAINS THAT BLEND
SEAMLESSLY INTO ANY DECOR.

Napa Round 3 Tier Stand
3540 Mango Wood, 15 mm Square Pipe

Stand: 24" L x 12" W x 28" H
Top & Bottom Shelves: 20.5" L x 12 W
Middle Shelf: 24" L x 12" W

Carmel Rectangle Tray
3556 Wood/Metal
18.0"L x 10.0"W x 1.6"H

Carmel Square Tray
3555 Wood/Metal
9.0"L x 9.0"W x 2.0"H

Napa Serving Tray
3546 Wood/Metal
16.0"L x 16.0"W x 2.5"H

Napa Butler Tray
3566 Wood
26"L x 16"W x 35"H

Napa Snack Tray
3547 Mango Wood
13"L x 21"W x 1.5"H

Napa Handled Tray Small
3593 Wood
15.7"L x 15.7"W x 1.6"H

Not Shown:
Napa Handled Tray Large
3594 Wood
23.6"L x 15.7"W x 1.6"H

RUSTIC ELEGANCE,
COMBINING OLD WITH NEW...

Napa Beverage Dispenser & Drip Tray
3615 Wood/Polycarbonate/Stainless Steel

Base	7.75"L x 7.75"W x 9.50"H
Drip Tray	5.5"L x 5.5"W x 1"H
8419 - Body	9"L x 9"W x 14"H
3 Gallons	

Napa Cup Caddy
3562 Wood
4.5"W x 8"H

Napa Small Caddy
3563 Wood
9.5"L x 4.5"W x 2"H

Napa Wood Buffet Tag
3567 Mango Wood
2"L x 1"W x 1.5"H

Riga & Tutta Bowls
See Page 133

Napa Wood Modern 3-Tier Stand
5188 Wood
22"L x 8"W x 19.25"H

Napa Cake Plate
3538 Wood
7"L x 7"W x 12"W

Napa Long Tray
3545 Wood
21.0"L x 6.4"W x 1.5"H

Credo Plate Large
7996 Porcelain
7.9"D x 4.3"H

Credo Plate Small
7998 Porcelain
4.3"D x 2.8"H

Mayfair Risers Square (S/3)
8188 Stainless Steel

Small	6"W x 6"L x 6"H
Medium	8"W x 8"L x 8"H
Large	10"W x 10"L x 10"H

Zurich Beverage Dispenser & Drip Tray
8133 Acrylic/Stainless Steel

Base	8"L x 8"W x 5"H
Drip Tray	5.5"L x 5.5"W x 1"H
3663 - Body	7.6"D x 14"H
1.5 Gallons	

Napa Long Tray
3545 Wood
21"L x 6.4"W x 1.5"H

Napa Modern Stand Tall
3531 Wood & Stainless Steel
8"W x 5.50"L x 20"H

Napa Small Round Tray
3586 Wood
6"D x 0.7"H

Zurich Tongs
8088 Stainless Steel
7"L x 2.1"W x 1"H

Zurich Cheese Set (S/4)
8271 Stainless Steel
5.5"L x 1"W x 8"H

Napa Cheeseboard Medium
3578 Wood
19.9"L x 7.9"W x 0.7"H

Napa Cheeseboard Large
3579 Wood
20.8"L x 12.2"W x 0.7"H

Napa Cheeseboard Small
3577 Wood
12.3"L x 6.6"W x 0.7"H

Napa Modern Stand Small
3530 Wood & Stainless Steel
16"W x 5.50"L x 11"H

Calistoga Rectangular Basket Black
8369 Wire
18.5"L x 6"W x 4"H

Calistoga Square Basket Black
1340 Wire
12"L x 12"W x 8"H

Napa Angled Crates S/2
3585 Mango Wood
Short: 17"L x 12"W x 6.1"H
Tall: 17"L x 12"W x 9.4"H
**Set includes one tray and one stand*

PERFECT BREAD BASKET WITH A TOUCH OF TEXTURE

Liza Bowl Large
8174 Stainless Steel
12"D x 5.4"H

NAPA CRATES

Elevate your crate! Combine wood, metals and porcelain to create a look that is always fresh.

Napa Crate Large
3589 Wood
19.7"L x 11.8"W x 7.4"H

Napa Crate Medium
3588 Wood
15.7"L x 11.8"W x 4"H

Napa Crate Small
3587 Wood
13"L x 13"W x 2"H

Napa Baskets (S/2)
3598 Wood
Large - 10"L x 10"W x 14"H
Small - 8"L x 8"W x 10"H

READY FOR SNACKING & SERVING

Napa 6 Compartment Cutlery Caddy
1969 Mango Wood/Iron
10"L x 7"W x 6"H

Napa Nesting Crates Narrow (S/3)
3610 Wood
Tier 1: 15.5"L x 12.8"W x 3.5"H
Tier 2: 15.5"L x 14.25"W x 8.25"H
Tier 3: 15.5"L x 15.5"W x 13"H

Napa Nesting Crates Wide (S/3)
3611 Wood
Tier 1: 15.5"L x 5.5"W x 3.5"H
Tier 2: 15.5"L x 6.5"W x 8.25"H
Tier 3: 15.5"L x 7.5"W x 13"H

NAPA BARK

Modern Marché meets Farmhouse Chic. A touch of rustic charm goes a long way.

Napa Bark Round Platter
1210 Mango Wood
14" L x 14 W x ..75" H

Napa Bark Rect. Plank - Small
1218 Mango Wood
17.5" L x 9 W x .75" H

Napa Bark Rect. Plank - Large
1235 Mango Wood
26" L x 8" W x .75" H

ZURICH

Mini-metals with massive presence.

Zurich Mini Dutch Oven
8135 Stainless Steel
3.25"L x 2.5"W x 3.75"H

Zurich Mini Balti
8137 Stainless Steel
3.0"D x 3.5"H

Zurich Mini Pan with Handles
8255 Stainless Steel
3.5"D x 2.4"H

Zurich Mini Cocktail Tray
8136 Stainless Steel
3.25"L x 2.5"W x 0.5"H

Zurich Ramekin
5170 Stainless Steel
2.5"D x 1"H - 2.5 oz.

Zurich Mini Planter
8169 Stainless Steel
2.5"D x 2.75"H

Zurich Tall Salt & Pepper Set
9050 Stainless Steel
1.7"D x 7.4"H

Zurich Double Wall Bowl Small
8268 Stainless Steel
10"D x 3.5"H

Zurich Double Wall Bowl Large
8267 Stainless Steel
11.5"D x 4.5"H

Zurich Snack Jar Small
8264 Stainless Steel
5.5"D x 4.5"H

Zurich Snack Jar Large
8265 Stainless Steel
6"D x 5.3"H

Heidi Milk Pail
Stainless Steel

Small 8252	2"D x 2"H
Medium 8253	2"D x 3"H
Large 8254	3"D x 4"H

Zurich Basket Large
8269 Stainless Steel
8"L x 17.5"W x 5.3"H

Zurich Bottle Cooler
8083 Stainless Steel
5.9"D x 6.4"H - 64 oz.

Zurich Round Tray Liner
9067 Vinyl
12"D

Zurich Round Tray
8154 Stainless Steel
12.0"D x 1.5"H

Zurich Champagne Tub DblWall
8153 Stainless Steel
12.4"D x 8.6"H - 74 oz.

Zurich Party Bucket
2516 Stainless Steel
24"L x 14"W x 8.25"H
960 oz.

Zurich Wine Bucket
8152 Stainless Steel
5.5"D x 4.5"H - 10 oz.

LUXURY IN STEEL

Crisp clean shapes made of stunning stainless steel.
Durable and so very fashion-forward.

Tutta Bowl Small
8146 Stainless Steel
3.25"D x 1.7"H

Tutta Bowl Medium
8147 Stainless Steel
3.75"D x 1.75"H

Tutta Bowl Large
8148 Stainless Steel
3.75"D x 2.0"H

RIGA & TUTTA

Riga Bowl Small
8143 Stainless Steel
3.5"D x 1.4"H

Not Shown:
Riga Bowl Medium
8144 Stainless Steel
3.9"D x 1.5"H

Riga Bowl Large
8145 Stainless Steel
4.3"D x 1.75"H

MENDOCINO

Natural wood with an elegant white wash finish.

Mendocino Large Footed Bowl
1222 Wood
11"D x 5.25"H

Mendocino Small Footed Bowl
1220 Wood
5"D x 4"H

Mendocino Small Platter
1225 Wood
12"D x 2.25"H

Mendocino Large Platter
1226 Wood
16"D x 2.25"H

Mendocino Tapered Bowl
1227 Wood
12"D x 4.5"H

Napa Duo Tray
3560 Wood
8.75"W x 19.5"L x 1.0"H

TRIESTE

Natural slate in its purest form.

Trieste Long Tray
8029 Natural Slate
21"L x 6.5"W x 0.5"H

Trieste Tray Small
8032 Natural Slate
8.5"L x 6.2"W x 0.5"H

Trieste Tray Large
8030 Natural Slate
17.8"L x 9.8"W x 0.5"H

Trieste Tray Medium
8031 Natural Slate
11.8"L x 7.5"W x 0.5"H

Trieste Tray Large Round
8033 Natural Slate
11"D x 0.5"H

Trieste Tray Small Round
8034 Natural Slate
9"D x 0.5"H

Lexington Party Tray
8023 Natural Slate
15.8"L x 11.8"W x 1.7"H

REDWOOD

Simple yet so very sophisticated.

Redwood Tray Small
3522 Wood
9.0"L x 5.0"W x 0.5"H

Redwood Cheese Board Small
3558 Wood
19.75."L x 7.75"W x 0.75"H

Redwood Tray Large
3520 Wood
14.0"L x 8.0"W x 0.5"H

Redwood Cheese Board Large
3559 Wood
26.0"L x 10.75"W x 0.75"H

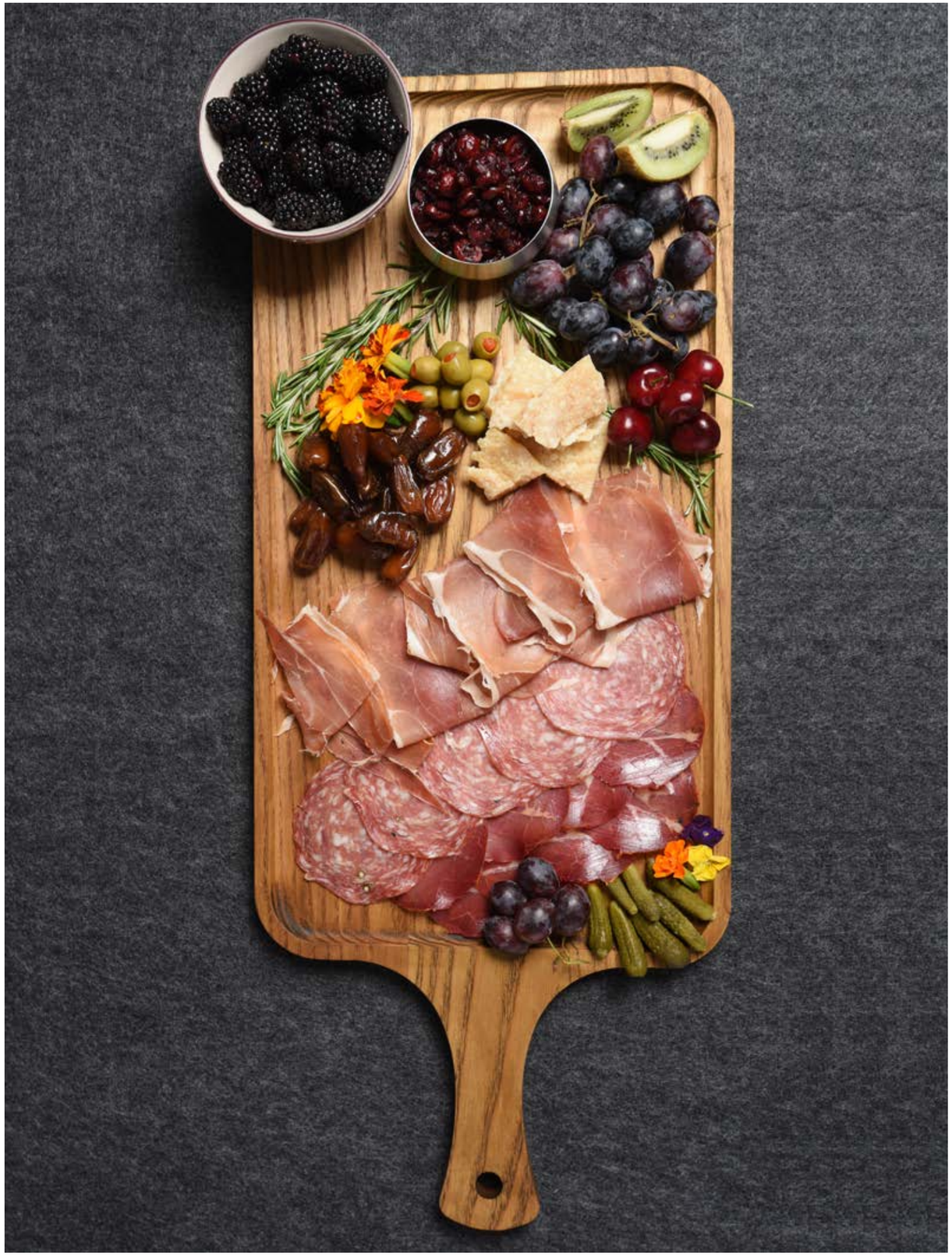

RISE TO THE OCCASION

Scaled down furniture pieces to add height where needed.

Knox Riser Large Silver
8308 Wood / Metal
14.5" D x 20.5" H

Knox Riser Small Silver
8309 Wood / Metal
12.1" D x 8.3" H

KNOX

Weighted bases with metal top surfaces not only add height but an architectural edge that is captivating.

Knox Round Riser Gold (S/2)
8360 Stainless Steel
Large: 12" D x 10" H
Small: 10" D x 6" H

NAPA CAGE

Add height to any display with these versatile risers that blend metal with wood seamlessly.

Napa Cage Riser Small
3613 Wood / Metal
11.1"D x 6.3"H

Napa Cage Riser Large
3612 Wood / Metal
11.1" D x 11.1" H

SERENGETI STONE

A stunning combination of rustic metal with easy-to-clean marble tops that are removable.

Serengeti Stone Riser (S/2)
3614 Metal / Marble
Large: 11.8" D x 12.3" H
Small: 7.75" D x 6.5" H

Serengeti Stone Riser XL
1333 Metal / Marble
14"D x 12.25"H

SEQUOIA

Wood embossed stainless steel risers that nest. Makes a lot of sense!

Sequoia Risers (S/3)
8251 Stainless Steel
Large 12"D x 10"H
Medium 9"D x 7"H
Small 6.5"D x 4"H

TUSCAN

Invite a touch of rustic charm to your next gathering. Elegant, super durable and just plain good-looking!

Tuscan Riser Large
8303 Iron
15.2"D x 21.4"H

Tuscan Riser Medium
8305 Iron
11.8"D x 11.3"H

Tuscan Riser Small
8304 Iron
11.8"D x 7.8"H

STOCKHOLM

Simple, sleek and made of stunning stainless steel, these risers are as good looking as they are functional.

Stockholm Riser Small Gold
8310 Stainless Steel
10"D x 8"H

Stockholm Riser Large Gold
8311 Stainless Steel
12"D x 10"H

Stockholm Riser Small Silver
8313 Stainless Steel
10"D x 8"H

Stockholm Riser Large Silver
8312 Stainless Steel
12"D x 10"H

MOONSCAPE

Our stunning textured patina on stackable stainless steel cubes hides wear and tear. Fashion forward banquet elevation made easy.

Moonscape Square Riser Silver (S/2)
8361 Stainless Steel
Large: 10"L x 10"W x 10"H
Small: 7.75"L x 7.75"W x 7.75"H

Mayfair Risers Rectangular (S/2)
8244 Stainless Steel
Small 20"L x 6"W x 3.5"H
Large 22"L x 8"W x 5"H

Mayfair Risers Round (S/2)
8245 Stainless Steel
Small 10"D x 6"H
Large 10"D x 10"H

MAYFAIR

These stainless steel food risers are all designed flawlessly.

Mayfair Risers Square (S/3)
8188 Stainless Steel
Small 6"W x 6"L x 6"H
Medium 8"W x 8"L x 8"H
Large 10"W x 10"L x 10"H

Serengeti Riser
Stainless Steel
8292 Small 8.1"D x 8.1"H
8291 Medium 10"D x 10"H
8290 Large 15.6"D x 19.7"H

COMET & SERENGETI

Add a modern touch to your next gathering with these beautiful and durable metal accessories. Combine heights and sizes for a fantastic look.

Comet Serving Bowl Small Black
8338 Stainless Steel
14.5"D x 6.5"H

Comet Serving Bowl Large Black
8337 Stainless Steel
17.3"D x 7.5"H

Comet Serving Bowl Small Silver
8336 Stainless Steel
14.5"D x 6.5"H

Comet Serving Bowl Large Silver
8335 Stainless Steel
17.3"D x 7.5"H

COMET

Comet Footed Bowl Small Silver
8340 Stainless Steel
10.3"D x 8"H

Comet Footed Bowl Large Silver
8339 Stainless Steel
14"D x 9.5"H

Comet Footed Bowl Large Black
8341 Stainless Steel
14"D x 9.5"H

Comet Footed Bowl Small Black
8342 Stainless Steel
10.3"D x 8"H

To add some different elevation to your display, unscrew the bowl from the base!

SOHO

Slightly rustic, yet very mid-century chic, these super functional props please any crowd and set the stage for a fantastic event.

Soho Tea Stand Large
8347 Iron
10" D x 21.5" H

Soho Tea Stand Small
8346 Iron
10" D x 15" H

Sequoia Rectangle Snack Tray - Large
1100 Stainless Steel
25" L x 5" W x .5" H

SEQUOIA

Fabulous wood-patterned embossing applied to stainless steel hides wear and tear.

Sequoia Rectangle Snack Tray - Medium
1090 Stainless Steel
17.5" L x 5" W x .5" H

Sequoia Square Snack Tray - Large
1076 Stainless Steel
14.75" L x 14.75" W x .5" H

Sequoia Square Snack Tray - Medium
1075 Stainless Steel
11.5" L x 11.5" W x .5" H

Sequoia Round Serving Tray
1073 Stainless Steel
13.75"D x 2"H

Sequoia Rectangle Serving Trays
Stainless Steel
1087 Large 26.75"L x 7.5"W x 1.2"H
1078 Medium 19.3"L x 7.50"W x 1.2"H

Sequoia Beverage Dispenser & Drip Tray
8327 Stainless Steel / Polycarbonate

Base	7.8"L x 7.75"W x 9.50"H
Drip Tray	5.5"L x 5.5"W x 1"H
Beverage Dispenser	9"L x 9"W x 14"H
3 Gallons	

LINO

Ultimate chef accessories with a rustic touch.

Lino Rectangle Snack Tray
1088 Stainless Steel
13.75" L x 7.5" W x .5" H

Lino Square Snack Tray
1074 Stainless Steel
9" L x 9" W x .5" H

BEVERAGES ARE SERVED!

Zurich Beverage Dispenser & Drip Tray
8133 Acrylic/Stainless Steel
Base 8"L x 8"W x 5"H
Drip Tray 5.5"L x 5.5"W x 1"H
3663 - Body 7.6"D x 14"H
1.5 Gallons

Napa Beverage Dispenser & Drip Tray
3615 Wood/Polycarbonate/Stainless Steel
Base 7.75"L x 7.75"W x 9.50"H
Drip Tray 5.5"L x 5.5"W x 1"H
8419 - Body 9"L x 9"W x 14"H
3 Gallons

Sequoia Beverage Dispenser & Drip Tray
8327 Stainless Steel / Polycarbonate
Base 7.8"L x 7.75"W x 9.50"H
Drip Tray 5.5"L x 5.5"W x 1"H
Beverage Dispenser 9"L x 9"W x 14"H
3 Gallons

Capri Dispenser - Square
3903 Polycarbonate
9.5"L x 9.5"W x 15"H - 2 Gallons

Capri Dispenser Large - Round
3904 Polycarbonate
11.5" D x 16" H- 2.3 Gallons

COFFEE BREAK

Coffee service made simple – and stylish.

Oscar Bin Large
9548 Stainless Steel
6"D x 5.9"H - 32 oz.

Oscar Bin Medium
9547 Stainless Steel
5"D x 4.9"H - 24 oz.

Abeille Small Creamer
8365 Stainless Steel
4"D x 7"H 20 oz.

Abeille Large Creamer
8364 Stainless Steel
4"D x 8"H 27 oz.

Zurich Airpot
8208 Stainless Steel/Zinc
8.25"W x 6.5"D X 16.75"H

** Airpot Wraps are sold separately. Please inquire.*

Napa Wood Buffet Tag
3567 Mango Wood
2"L x 1"W x 1.5"H

Napa Long Caddy
3571 Wood
15.3"L x 6.3"W x 2"H

Napa Napkin Caddy
3572 Wood
5.3"L x 5.3"W x 2"H

Napa Large Tea Box
3569 Wood
11.5"L x 10.8"W x 3.2"H

Napa Small Tea Box
3568 Wood
11"L x 7.8"W x 3.2"H

Napa Small Caddy
3563 Wood
9.5"L x 4.5"W x 2"H

Napa Cup Caddy
3562 Wood
4.5"W x 8"H

Napa Caddy
3541 Wood
8.25"L x 8.25"W x 2.75"H

FRAME IT!

Signs, pictures, buffet tags, seating assignments – whatever your needs, these holders will deliver!

Spiga Frame 4x6
1083 Acrylic
4.0"L x 6.0"H x 1.0"W

Spiga Frame 5x5
1084 Acrylic
5.0"L x 5.0"H x 1.0"W

Wedge Frame 4x6
Acrylic
9672 (Landscape)
1369 (Portrait)
4" x 6" x 1.5"

Also available in
5" x 7" (1376)
4.5" x 2.75" (9707)

Wedge Frame 5x5
9673 Acrylic
5.5"L x 5.5"H x 1.5"W

Spiga "L" Frame
9910 Acrylic
8.6"L x 11.1"H x 0.5"W

Spiga Buffet Tag Clear
1086 Acrylic
1.75"L x 1"W x 1.5"H

Spiga Buffet Tag Blue
1190 Acrylic
1.75"L x 1"W x 1.5"H

Spiga Buffet Tag Red
1191 Acrylic
1.75"L x 1"W x 1.5"H

DURABLE PIECES THAT MATCH ANY SETTING

Spiga Cocktail Tray
1062 Acrylic
17.4"L x 16"W 2.8"H

WE CUSTOMIZE!

Let us custom create a full line of acrylic banquet and coffee set up supplies for you. Low minimums, super durable, endless color options and quick turnaround!

Spiga Buffet Tag Black
1085 Acrylic
1.75"L x 1"W x 1.5"H

Spiga Long Caddy*
1022 Acrylic
14.0"L x 6.0"W x 2.0"H

**Special order item; please inquire. Also available in white*

Madrid Coasters Black
3816 Faux Leather
4.5"L x 4.5"W x 1.4"H

Boden Tray Large Black
9055 Wood
19.5"D x 1.4"H

CAN NEVER HAVE ENOUGH TRAYS

Serving made stylish. Don't just serve, elevate with our trays.

Ingrid Tray Small Natural
9059 Wood
17.5"L x 13.2"W x 1.8"H

Annegard Tray Large Natural
9061 Wood
17.3"L x 12.2"W x 1.6"H

Bergen Tray Black
9053 Wood
21.7"L x 14.2"W x 1.8"H

Not Shown:
Bergen Tray Natural
9052 Wood
21.7"L x 14.2"W x 1.8"H

GREENWICH

Elegant mirrored trays that suit any setting.

Greenwich Round Tray Medium
8247 Stainless Steel/Mirror
16.5"D x 2"H

Greenwich Round Tray Large
8246 Stainless Steel/Mirror
21.5"D x 2"H

LUXURY & SIMPLICITY FOR ANY OCCASION

Stockholm Tray*
8096 Stainless Steel/Mirror
24"L x 13.8"W x 1.6"H

Greenwich Round Tray Small
8248 Stainless Steel/Mirror
13"D x 2"H

*These SKUs are produced on a special order basis; please inquire

DECORATIVE TOUCHES

Vases and votives that steal the show

OSLO & PAPER

Add angular flair with our textured
modern ceramic vases.

Oslo Gray Tall
3729 Ceramic
7" L x 7" W x 10.5" H

Paper Vase Tall Blue Matte White
3726 Ceramic
6.5" L x 6.5" W x 14" H

Paper Vase Short Red Matte White
3727 Ceramic
6.5" L x 6.5" W x 7" H

LINA & PINA

Perfectly sized bud vases that quietly steal any show.
Stunning in a simple way, perfect for any interior decor.

Lina Bud Vase Green
5745 Glass
3.3"D x 3.3"H

Lina Bud Vase Amber
5746 Glass
3.3"D x 3.3"H

Lina Bud Vase White
5747 Glass
3.3"D x 3.3"H

Pina Bud Vase Green
5740 Glass
2.4"D x 4"H

Pina Bud Vase Amber
5741 Glass
2.4"D x 4"H

Pina Bud Vase White
5742 Glass
2.4"D x 4"H

NORDIC

Stately accents in beautiful glazed ceramic.

Nordic Vase Large White
3715 Ceramic
6.5"D x 26"H

Nordic Vase Medium White
3713 Ceramic
6.5"D x 20.0"H

Nordic Vase Small White
3714 Ceramic
6.5"D x 12.75"H

NORI

Inspired by fine architectural influences that we found throughout Japan, our favorite new decorative accents are understated yet oozing with personality. Top pick!

Nori Vase Large White
3721 Ceramic
3.75"D x 15.35"H

Nori Vase Small White
3720 Ceramic
2.5"D x 9.45"H

MALIBU

GLITZ & GLAM TO SPICE UP ANY FLORAL DISPLAY

Malibu Vase Small Gold
3718 Ceramic
2.75"D x 10.25"H

Malibu Vase Large Gold
3719 Ceramic
4.5"D x 15.25"H

Malibu Vase Large Silver
3717 Ceramic
4.5"D x 15.25"H

Malibu Vase Small Silver
3716 Ceramic
2.75"D x 10.25"H

BORDA & CLARA

Fabulous textures and stunning colors that elevate your tabletop offerings to new levels.

Borda Votive Clear
5730 Glass
3"D x 3.15"H

Borda Votive Red
5732 Glass
3"D x 3.15"H

Borda Votive Cobalt
5731 Glass
3"D x 3.15"H

Borda Votive Amber
5733 Glass
3"D x 3.15"H

Clara Votive Green
5722 Glass
3.31"D x 3.31"H

Clara Votive Amber
5721 Glass
3.31"D x 3.31"H

Clara Votive Clear
5720 Glass
3.31"D x 3.31"H

Vincenza Votive Green
5739 Glass
3.3"D x 3"H

Vincenza Votive Clear
5737 Glass
3.3"D x 3"H

Vincenza Votive Amber
5738 Glass
3.3"D x 3"H

MONDA & VINCENZA

Rich tones of blown glass that sparkle and shine. Radiate any setting with our stunning new additions to our tabletop lighting offerings.

Monda Votive Green
5726 Glass
2.75"D x 3.1"H

Monda Votive Amber
5728 Glass
2.75"D x 3.1"H

Monda Votive Red
5727 Glass
2.75"D x 3.1"H

Monda Votive Smoke
5729 Glass
2.75"D x 3.1"H

SUNSET

Sunset Votive Amber - Small
Glass 5716
2.5" W x 3" H

Sunset Votive Green - Small
Glass 5714
2.5" W x 3" H

Sunset Votive Red - Small
Glass 5713
2.5" W x 3" H

Sunset Votive Cobalt - Small
Glass 5715
2.5" W x 3" H

Sunset Votive Pearl Large
5565 Glass
3.5"D x 3.75"H

Set the mood with tabletop lighting
that adds the perfect pop.

Sunset Votive Pearl Small
5568 Glass
2.5"D x 3"H

Sunset Votive Smoke Small
5567 Glass
2.5"D x 3"H

Sunset Votive Smoke Large
5564 Glass
3.5"D x 3.75"H

Sunset Votive Clear Small
5566 Glass
2.5"D x 3"H

Sunset Votive Clear Large
5563 Glass
3.5"D x 3.75"H

VASE TODAY. VOTIVE TOMORROW.

Tiger Votive
1055 Alabaster
2.95"D x 3.74"H

GALAXY

Simply out of this world.

Galaxy Votive Tan
5106 Glass
4.0"D x 3.8"H

Galaxy Votive Red/Orange
5105 Glass
3.8"D x 3.4"H

Galaxy Votive Brown
5102 Glass
3.8"D x 3.4"H

Galaxy Votive Green
5104 Glass
3.8"D x 3.4"H

Galaxy Votive Blue
5103 Glass
3.8"D x 3.4"H

Galaxy Votive Aqua
5101 Glass
3.8"D x 3.4"H

Sophisticated touches for any setting or occasion.

Pearl Votive Amber
5206 Glass
3.6"D x 3.4"H

Noma Votive Blue
5201 Glass
3"D x 4"H

Noma Votive Green
5202 Glass
3"D x 4"H

Noma Votive Aqua
5200 Glass
3"D x 4"H

Marais Votive Silver
5480 Glass
3.7"D x 4.5"H

**Special order item; please inquire.*

PARISIAN

Metallic, colorful and the ultimate “go-to” tricks for any special setting.
Perfectly sized and weighted to add the right amount of pizazz to any decor.
Timeless essentials.

PERFECT FOR FLORAL ARRANGMENTS TOO!

Parisian Votive Red
5458 Glass
4.5˚D x 3.8˚H

Parisian Votive Silver
5462 Glass
4.5˚D x 3.8˚H

Parisian Votive Aqua
5452 Glass
4.5˚D x 3.8˚H

Parisian Votive Green
5454 Glass
4.5˚D x 3.8˚H

Parisian Votive Gold
5447 Glass
4.5˚D x 3.8˚H

LET THERE BE LIGHT!

Indoor & outdoor illumination solutions that charge, charge and re-charge – in fabulous and durable style.

TOP 2.0

Top 2.0
Plastic, 5"D x 3.5"H - 1.3 watt
Matching multi charger 725191 (13-Port USB Hub)
Optional Silicone Plug Enlargement 725291

COLOR CHANGING MODE

Neon Pink 72536

Neon Orange 72537

Neon Yellow 72538

Neon Green 72539

Black 72520

White 72521

Blue 72522

Olive 72523

Bordeaux 72524

Orange 72525

Yellow 72526

Green 72527

Champagne 72540

Graphite 72541

Metallic Green 72542

Metallic Pink 72543

Sand 72528

Red 72530

Lilac 72531

Anthracite72532

Chrome 72550

Gold 72551

Copper 72552

Space Gray 72553

Rose Gold 72554

Gray 72533

Turquoise 72534

Pink 72535

Silicone Plug
Enlargement 725291

TROLL

Troll Table Lamp
Aluminum

Troll Nano: 2.4"D x 8.3"H - 1.6 watt
Matching multi charger:
78579 (15-Fold Multi Charging Station T Nano)

Troll 2.0: 4.3"D x 15"H - 2.4 watt
Matching multi charger:
781792 (6-Fold Multi Charging Station T)

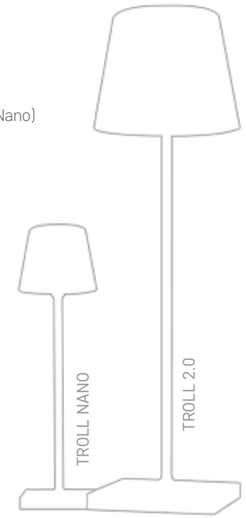

78570 Troll Nano White *(pictured)*

78170 Troll 2.0 White

White 78270 | Black 78271 | Olive 78274 | Anthracite 78280 | Sand 78284 | Gray 78285

Troll Floor Lamp*
Aluminum; 4.3"D x 47"H, Base: 6"L x 6"W - 2.4 watt
Matching multi charger 725191 (13-Port USB Hub)
**Ask about custom colors! (minimum order quantity 500 pieces)*

78584 Troll Nano Sand
78184 Troll 2.0 Sand

78571 Troll Nano Black
78171 Troll 2.0 Black

78580 Troll Nano Anthracite
78180 Troll 2.0 Anthracite

78585 Troll Nano Gray
78185 Troll 2.0 Gray

78573 Troll Nano Rust
78173 Troll 2.0 Rust

78572 Troll Nano Yellow
78172 Troll 2.0 Yellow

78581 Troll Nano Red
78181 Troll 2.0 Red

78574 Troll Nano Olive
78174 Troll 2.0 Olive

78575 Troll Nano Blue
78175 Troll 2.0 Blue

78576 Troll Nano Orange
78176 Troll 2.0 Orange

78577 Troll Nano Pink
78177 Troll 2.0 Pink

78586 Troll Nano Silver
78186 Troll 2.0 Silver

78587 Troll Nano Gold
78187 Troll 2.0 Gold

78588 Troll Nano Copper
78188 Troll 2.0 Copper

78589 Troll Nano Rose Gold
78189 Troll 2.0 Rose Gold

PULSE

White 78510

Anthracite 78511

Silver 78512

Gold 78513

Olive 78514

Turquoise 78515

Pink 78516

Peach 78517

Neon Pink 78518

Neon Orange 78519

Neon Yellow 78520

Neon Green 78521

Pulse
Plastic, 2.7"D x 5.7"H - 0.5 watt
Matching multi charger 725191 (13-Port USB Hub)

MODENA

Matching multi charger 96996 (15-Fold Charging Stations S Micro)

Modena Small White
97280 Aluminum
3.1"D x 6.3"H - 1 watt

Modena Large White
97290 Aluminum
3.1"D x 8.3"H - 1.5 wat

Modena Small Anthracite
97281 Aluminum
3.1"D x 6.3"H - 1 watt

Modena Large Anthracite
97291 Aluminum
3.1"D x 8.3"H - 1.5 wat

Modena Small Black
97282 Aluminum
3.1"D x 6.3"H - 1 watt

Modena Large Black
97292 Aluminum
3.1"D x 8.3"H - 1.5 wat

Modena Small Sand
97283 Aluminum
3.1"D x 6.3"H - 1 watt

Modena Large Sand
97293 Aluminum
3.1"D x 8.3"H - 1.5 wat

Modena Small Brushed Gold
97285 Aluminum
3.1"D x 6.3"H - 1 watt

Modena Large Brushed Gold
97295 Aluminum
3.1"D x 8.3"H - 1.5 wat

Modena Small Brushed Graphite
97286 Aluminum
3.1"D x 6.3"H - 1 watt

Modena Large Brushed Graphite
97296 Aluminum
3.1"D x 8.3"H - 1.5 wat

BORO

Boro
Aluminum; 3.5"D x 8.6"H - 2.5 watt
Matching multi charger 96990 (6-Fold Charging Stations S)

Black 78320

White 78321

Rust 78322

Anthracite 78323

Chrome 78324

Gold 78325

Rose Gold 78326

Space Gray 78327

PEBBLE & PEEKY

White 78680 | Black 78681 | Olive 78682 | Sand 78683 | Pink 78684 | Turqoise 78685 | Brushed Gold 78686 | Brushed Graphite 78687

Pebble
Aluminum, 3.5"D x 9"H - 1.9 watt
Matching multi charger 725191 (13-Port USB Hub)

INCLUDES PLANTGROWTH LED

Sand 72723 | White 72720 | Anthracite 72721 | Olive 72722 | Yellow 72724 | Orange 72725

Peeky
Plastic & Aluminum, 2.2"D x 11.6"H - 1 watt
Matching multi charger 725191 (13-Port USB Hub)

LUBAO

PRESS TOP TO OPEN & TURN ON

Lubao
Aluminum, 3"D x 9"H - 2.2 watt
Matching multi charger 725191 (13-Port USB Hub)

Sand 78623 | Olive 78622 | Anthracite 78621 | White 78620

REMOVABLE PENDANT WITH COLOR CHANGE MODE

MIKONO

Matching multi charger 725191 (13-Port USB Hub)

Mikono Black
78630 Polycarbonate
6.3"H, base 2.6"D, top 5.7"D - 1 watt

Mikono Gray
78631 Polycarbonate
6.3"H, base 2.6"D, top 5.7"D - 1 watt

Mikono Olive
78632 Polycarbonate
6.3"H, base 2.6"D, top 5.7"D - 1 watt

KORKY

Matching multi charger 725191 (13-Port USB Hub)

Korky Black
72680 Stainless Steel
2.4"W x 4"H x 0.98"D - 1 watt

Korky Silver
72681 Stainless Steel
2.4"W x 4"H x 0.98"D - 1 watt

FLORA & ALVA

Matching multi charger 725191 (13-Port USB Hub)

Flora
Aluminum; 11.6"H - 2.3 watt; Base: 2"L x 2"W
White 78460, Black 78461, Red 78462, Olive 78463, Gray 78465, Chrome 78467

COMES WITH CANDLELIGHT FUNCTION!

Alva Black
78440 Aluminum
3"D x 7"H - 1.1 watt

Alva Anthracite
78442 Aluminum
3"D x 7"H - 1.1 watt

Alva Olive
78443 Aluminum
3"D x 7"H - 1.1 watt

Alva Sand
78444 Aluminum
3"D x 7"H - 1.1 watt

Alva White
78441 Aluminum
3"D x 7"H - 1.1 watt

ESSENCE

Matching multi charger 725191 (13-Port USB Hub)

Essence Black
78220 Aluminum
4.5"D x 13"H - 3.5 watt

Essence White
78221 Aluminum
4.5"D x 13"H - 3.5 watt

Essence Anthracite
78222 Aluminum
4.5"D x 13"H - 3.5 watt

Essence Ocean Blue
78223 Aluminum
4.5"D x 13"H - 3.5 watt

HEIGHT ADJUSTABLE

MOVE

Matching multi charger 725191 (13-Port USB Hub)

Move Green
78344 Aluminum
6"D x 8.5 - 12"H - 2.5 watt

Move Black
78340 Aluminum
6"D x 8.5 - 12"H - 2.5 watt

Move White
78341 Aluminum
6"D x 8.5 - 12"H - 2.5 watt

Move Anthracite
78342 Aluminum
6"D x 8.5 - 12"H - 2.5 watt

Move Red
78343 Aluminum
6"D x 8.5 - 12"H - 2.5 watt

VOLUME

Volume
Plastic, 3.5"D x 6.3"H - 1.6 watt
Matching multi charger 96996 (15-Fold Charging Stations S Micro)

Black 78531

White 78530

Gray 78532

Sand 78533

Olive 78534

Turquoise 78535

Pink 78536

Apricot 78537

Neon Pink 78538

Neon Orange 78539

Neon Yelow 78540

Neon Green 78541

DENNIS & DAVE

Matching multi charger 78579 (15-Fold Multi Charging Station T Nano)

Available Colors

White

Anthracite

Gray

Olive

Sand

Dennis Black
78641 Aluminum
2.3"D x 11.6"H - 1.5 watt
White 78640, Anthracite 78642
Gray 78643, Olive 78644, Sand 78645

Dave Black
78661 Aluminum
2.3"D x 11.6"H - 1.5 wattt
White 78660, Anthracite 78662
Gray 78663, Olive 78664, Sand 78665

COLOR CHANGING MODE

Chrome 72586

Gold 72587

Space Gray 72588

GINN

Ginnn
Plastic, 3.7"D x 7"H - 1.2 watt
Matching multi charger:
96990 (6-Fold Charging Stations S)

Black 72580

White 72581

Gray 72584

Sand 72583

Olive 72582

Turquoise 72585

MONACO & PORTOFINO

Matching multi charger 725191 (13-Port USB Hub)

Monaco
Aluminum
2.2"D x 8.3"H - 2.2 watt
Comes with Silwy® placemat

Black
SYSO-2024-S1

White
SYSO-2024-S2

Olive
SYSO-2024-S3

Sand
SYSO-2024-S4

MAGNET INTEGRATED IN LAMP BASE

Portofino
Aluminum
2"D x 8"H - 2.2 watt
Comes with Silwy® Metal-Pad 3M and Silwy® placemat

Black
SYSO-2024-W1

White
SYSO-2024-W2

Olive
SYSO-2024-W3

Sand
SYSO-2024-W4

OMBRELLINO

Ombrellino
Aluminum, 6.3"D x 9.5"H - 2.5 watt
Matching multi charger 725191 (13-Port USB Hub)

Black 78350 | White 78351 | Anthracite 78352 | Yellow 78353 | Red 78354 | Green 78355 | Blue 78356 | Orange 78357

MUMBAI

USE WITH GESTURE CONTROL

Mumbai
Ceramic, 5.3"D x 6"H - 2.5 watt
White 96980, Black 96981
Matching multi charger 725191 (13-Port USB Hub))

EONO

Matching multi charger 725191 (13-Port USB Hub)

Eono White
78600 Aluminum
3.1"D x 7.8"H - 2.2 watt

Eono Black
78601 Aluminum
3.1"D x 7.8"H - 2.2 watt

MERIDIAN

Matching multi charger 725191 (13-Port USB Hub)

Meridian White
78231 Aluminum
10"L x 2.6"W x 8"H - 2.5 watt

Meridian Black
78230 Aluminum
10"L x 2.6"W x 8"H - 2.5 watt

Meridian Anthracite
78232 Aluminum
10"L x 2.6"W x 8"H - 2.5 watt

Meridian Ocean Blue
78233 Aluminum
10"L x 2.6"W x 8"H - 2.5 watt

Meridian Large Black
78235 Aluminum
16"L x 2.6"W x 12"H - 4 watt

Meridian Large White
78236 Aluminum
16"L x 2.6"W x 12"H - 4 watt

Meridian Large Anthracite
78237 Aluminum
16"L x 2.6"W x 12"H - 4 watt

Meridian Large Ocean Blue
78238 Aluminum
16"L x 2.6"W x 12"H - 4 watt

COIL

Matching multi charger 725191 (13-Port USB Hub)

Coil Black
78240 Aluminum
3.3"D x 11"H - 2 watt

Coil White
78241 Aluminum
3.3"D x 11"H - 2 watt

Coil Anthracite
78242 Aluminum
3.3"D x 11"H - 2 watt

Coil Blue
78243 Aluminum
3.3"D x 11"H - 2 watt

Coil Green
78244 Aluminum
3.3"D x 11"H - 2 watt

Coil Red
78245 Aluminum
3.3"D x 11"H - 2 watt

MINIMAL

Matching multi charger 725191 (13-Port USB Hub)

Minimal Silver
77020 Aluminum
1.7"D x 12"H - 2 watt

Minimal Gold
77021 Aluminum
1.7"D x 12"H - 2 watt

Minimal Rose Gold
77022 Aluminum
1.7"D x 12"H - 2 watt

SWIVELING SHADE

Tip Black
78250 Aluminum
5.3"D x 8.3"H - 2.5 watt

Tip White
78251 Aluminum
5.3"D x 8.3"H - 2.5 watt

Tip Anthracite
78252 Aluminum
5.3"D x 8.3"H - 2.5 watt

Tip Red
78253 Aluminum
5.3"D x 8.3"H - 2.5 watt

TIP

Matching multi charger 96990 (6-Fold Charging Stations S)

PIPE

Matching multi charger 725191 (13-Port USB Hub)

360° SWIVELING HEAD!

Pipe Black
77000 Aluminum
5"D x 15"H - 2.2 watt

Pipe White
77001 Aluminum
5"D x 15"H - 2.2 watt

Pipe Anthracite
77002 Aluminum
5"D x 15"H - 2.2 watt

Pipe Tall Black
77012 Aluminum
7.8"D x 47"H - 2.2 watt

Pipe Tall White
77011 Aluminum
7.8"D x 47"H - 2.2 watt

Pipe Tall Anthracite
77010 Aluminum
7.8"D x 47"H - 2.2 watt

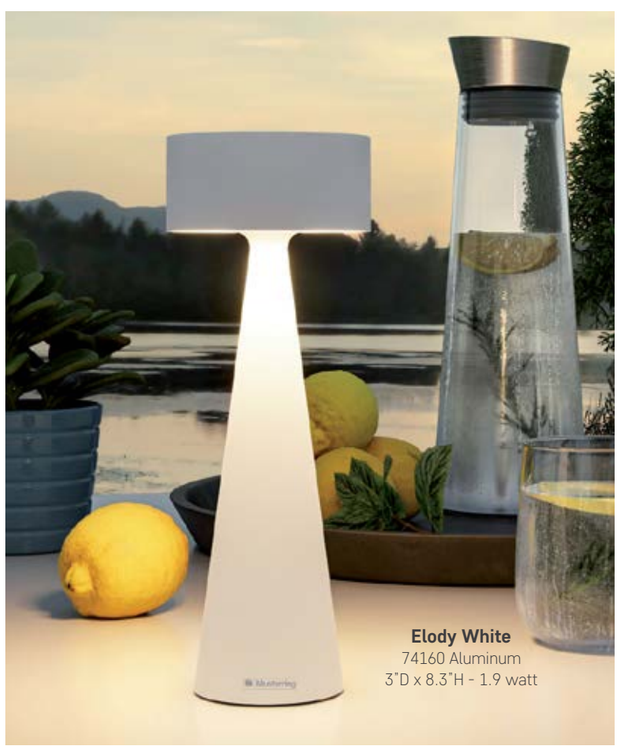

Elody White
74160 Aluminum
3"D x 8.3"H - 1.9 watt

ELODY

Matching multi charger 78579 (15-Fold Multi Charging Station T Nano)

Elody Black
74161 Aluminum
3"D x 8.3"H - 1.9 watt

Elody Sand
74162 Aluminum
3"D x 8.3"H - 1.9 watt

AARHUS

Matching multi charger 781792 (6-Fold Multi Charging Station T)

USE WITH OR WITHOUT CANDLE

Aarhus
Aluminum/Silicone; 3.7"D x 11.8"H - 2.3 watt
Anthracite 97041, Black 97042, Olive 97043, Sand 97044, White 97040

Siena Chrome
97053 Aluminum/Marble
2.5"D x 10"H - 1.9 watt
Siena Matching multi charger 78579
(15-Fold Multi Charging Station T Nano)

SIENA & LUNA

Siena White
97050 Aluminum/Marble
2.5"D x 10"H - 1.9 watt

Siena Black
97051 Aluminum/Marble
2.5"D x 10"H - 1.9 watt

Siena Gold
97054 Aluminum/Marble
2.5"D x 10"H - 1.9 watt

Luna
Aluminum; 4.3"D x 11.8"H - 3.5 watt
White 74100, Black 74101, Anthracite 74103, Ocean Blue 74104, Sand 74107, Chrome 74105
Matching multi charger 725191 (13-Port USB Hub)

COLOR CHANGING MODE

BARI & CAPRI

Matching multi charger 96996 (15-Fold Charging Stations S Micro)

Available Colors

White

Gray

Olive

Sand

Bari Black
76040 Aluminum
3"D x 12"H - 2.5 watt
White 76041, Gray 76042,
Olive 76043, Sand 76044

Capri Black
76050 Aluminum
2.6"L x 2.6"W x 10"H - 2.5 watt
White 76051, Gray 76052,
Olive 76053, Sand 76054

BORDEAUX

Matching multi charger 725191 (13-Port USB Hub)

Bordeaux Black
96937 Aluminum/Stainless Steel
6.3"D x 8.5"H - 2.5 watt

Bordeaux Anthracite
96936 Aluminum/Stainless Steel
6.3"D x 8.5"H - 2.5 watt

Bordeaux White
96935 Aluminum/Stainless Steel
6.3"D x 8.5"H - 2.5 watt

COLOR CHANGING MODE

SEOUL

NEW
CERAMIC &
BRUSHED
ALUMINUM

97200 Seoul White
97240 Seoul Micro White

97201 Seoul Anthracite
97241 Seoul Micro Anthracite

97202 Seoul Black
97242 Seoul Micro Black

97203 Seoul Olive
97243 Seoul Micro Olive

97204 Seoul Sand
97244 Seoul Micro Sand

97080 Seoul Ceramic White
97100 Seoul Micro Ceramic White

97081 Seoul Ceramic Black
97101 Seoul Micro Ceramic Black

97082 Seoul Ceramic Ivory
97102 Seoul Micro Ceramic Ivory

97205 Seoul Chrome

97206 Seoul Gold

97208 Space Gray

97207 Rose Gold

97245 Seoul Micro Chrome

97246 Seoul Micro Gold

Seoul Table Lamp
Aluminum

Seoul: 4.3"D x 7.8"H - 3.5 watt
Matching multi charger:
96990 (6-Fold Charging Stations S)

Seoul Micro: 3"D x 7.8"H - 2.3 watt
Matching multi charger:
96996 (15-Fold Charging Stations S Micro)

SEOUL NOW
AVAILABLE
WITH REMOTE
CONTROL

970991

97209 Seoul Brushed Gold
97247 Seoul Micro Brushed Gold

97210 Seoul Brushed Graphite
97248 Seoul Micro Brushed Graphite

NEED AN EVEN SMALLER OPTION?

Seoul Nano
Aluminum & Ceramic, 2.3"D x 4.7"H - 1.5 watt
Matching multi charger 96996 (15-Fold Charging Stations S Micro)

White 97120

Black 97121

Ivory 97122

Neapel Micro White
97260 Aluminum
2.5"L x 2.5"W x 7.8"H
2.3 watt

NEAPEL

Matching multi charger 96990 (6-Fold Charging Stations S)

Neapel White
97220 Aluminum
4"L x 4"W x 7.8"H - 2.2 watt

Neapel Anthracite
97221 Aluminum
4"L x 4"W x 7.8"H - 2.2 watt

Neapel Black
97222 Aluminum
4"L x 4"W x 7.8"H - 2.2 watt

Neapel Olive
97223 Aluminum
4"L x 4"W x 7.8"H - 2.2 watt

Neapel Sand
97224 Aluminum
4"L x 4"W x 7.8"H - 2.2 watt

Neapel Chrome
97225 Aluminum
4"L x 4"W x 7.8"H - 2.2 watt

Neapel Gold
97226 Aluminum
4"L x 4"W x 7.8"H - 2.2 watt

Neapel Rose Gold
97227 Aluminum
4"L x 4"W x 7.8"H - 2.2 watt

Neapel Space Gray
97228 Aluminum
4"L x 4"W x 7.8"H - 2.2 watt

White 97260 | Anthracite 97261 | Black 97262 | Olive 97263 | Sand 97264 | Chrome 97265 | Gold 97266

Neapel Micro
Aluminum, 3"D x 7.8"H - 2.3 watt
Matching multi charger 96996 (15-Fold Charging Stations S Micro)

NEW
CERAMIC &
BRUSHED
ALUMINUM

97090 Neapel Ceramic White
97110 Neapel Micro Ceramic White

97091 Neapel Ceramic Black
97111 Neapel Micro Ceramic Black

97092 Neapel Ceramic Ivory
97112 Neapel Micro Ceramic Ivory

97229 Neapel Brushed Gold
97267 Neapel Micro Brushed Gold

97230 Neapel Brushed Graphite
97268 Neapel Micro Brushed Graphite

NEAPEL NOW
AVAILABLE
WITH REMOTE
CONTROL

970991

White 97130

Black 97131

Ivory 97132

NEED AN EVEN SMALLER OPTION?

Neapel Nano
Aluminum & Ceramic, 2.3"D x 4.7"H - 1.5 watt
Matching multi charger 96996 (15-Fold Charging Stations S Micro)

SALERNO

Matching multi charger 96990 (6-Fold Charging Stations S)

COLOR CHANGING MODE

Salerno Black
76030 Aluminum
4.3"D x 3.7"H - 1.4 watt

Salerno White
76031 Aluminum
4.3"D x 3.7"H - 1.4 watt

Salerno Gray
76032 Aluminum
4.3"D x 3.7"H - 1.4 watt

Salerno Olive
76033 Aluminum
4.3"D x 3.7"H - 1.4 watt

Salerno Sand
76034 Aluminum
4.3"D x 3.7"H - 1.4 watt

NIP

Nip
Aluminum, 1.7"D x 4"H - 1.8 watt
Matching multi charger 78579
(15-Fold Multi Charging Station T Nano)

Black 77030

White 77031

Sand 77032

BANGKOK

Matching multi charger 725191 (13-Port USB Hub)

Bangkok Tall White
96886 Aluminum
9"D x 19.6"H - 2.5 watt

Bangkok Tall Black
96885 Aluminum
9"D x 19.6"H - 2.5 watt

Bangkok Short White
96881 Aluminum
9"D x 13"H - 2.5 watt

Bangkok Short Black
96880 Aluminum
9"D x 13"H - 2.5 watt

CANNES

Matching multi charger 725191 (13-Port USB Hub)

Cannes Tall White
96910 Aluminum
7.3"L x 7.3"W x 19.6"H
2.2 watt

Cannes Short White
96900 Aluminum
7.3"L x 7.3"W x 11.8"H
2.2 watt

Cannes Tall Anthracite
96911 Aluminum
7.3"L x 7.3"W x 19.6"H
2.2 watt

Cannes Short Anthracite
96901 Aluminum
7.3"L x 7.3"W x 11.8"H
2.2 watt

BERGAMO

White 97070

Gray 97071

Black 97072

Olive 97073

Apricot 97074

Rust 97075

Brushed Gold 97076

Brushed Graphite 97077

Bergamo
Aluminum & Polycarbonate, 4.7"D x 7"H - 1.8 watt
Matching multi charger 96990 (6-Fold Charging Stations S)

MINIMAX

Minimax
Aluminum, 2"D x 11.8"H - 1.8 watt
Matching multi charger 78579 (15-Fold Multi Charging Station T Nano)

White 78610 | Black 78611 | Anthracite 78612 | Olive 78613 | Sand 78614 | Chrome 78617 | Gold 78618

MONZA & VENEZIA

Matching multi chargers:
781792 (6-Fold Multi Charging Station T) and 78579 (15-Fold Multi Charging Station T Nano)

Monza
Aluminum, 2.7"D x 9.25"H - 1.2 watt
Black 76020, White 76021, Gray 76022, Olive 76023, Sand 76024

Venezia
Aluminum, 3"D x 10"H - 1.4 watt
Black 76060, Gray 76061, Olive 76062, Sand 76063, White 76064

DINING AL FRESCO

Unbreakable dinnerware has never looked so good

ANTIBES

Simply put, our Antibes unbreakable dinnerware collection is best in class. Sophisticated and elegant, it was designed along the shores of the French Riviera. Ready to impress guests worldwide, be the first to indulge.

Antibes Rectangular Platter
6508 Melamine
10.6"L x 4.72"W 0.98"H

Antibes Snack Tray
6505 Melamine
12.8"L x 6.9"W x 1.18"H

Antibes Main Plate
6500 Melamine
10.5"D x 1"H

Antibes Side Plate
6501 Melamine
6.3"D x 0.25"H

a. Antibes Round Ramekin
6502 Melamine
3.3"D x 1.3"H

b. Antibes Small Bowl
6504 Melamine
6.5"D x 2.1"H

c. Antibes Square Bowl
6509 Melamine
5.0"L x 5.0"W x 1.5"H

d. Antibes Large Bowl
6503 Melamine
8.5"Dx 3.1"H

Mondra Large Plate Blue
See Page 210

Naples Bento Box
See Page 240

MONDRA

Let's revolutionize dining al fresco! Our unbreakable melamine dinnerware takes outdoor entertaining to new levels of design and practicality with its simple yet sophisticated silhouettes.

Mondra Large Plate Blue
1401 Melamine
10.25"D x 1.5"H

Mondra Rectangle Platter Blue
1409 Melamine
10.0"L x 5"W x 1.5"H

Mondra Small Plate Blue
1400 Melamine
7.25"D x 1.12"H

Mondra Small Bowl Blue
1408 Melamine
5.75"D x 2.5"H

Mondra Large Bowl Blue
1407 Melamine
9.0"D x 4"H

a. Mondra Small Bowl Grey
1403 Melamine
5.75"D x 2.5"H

b. Mondra Large Plate Grey
1406 Melamine
10.25"D x 1.5"H

c. Mondra Rectangle Platter Grey
1402 Melamine
10.0"L x 5"W x 1.5"H

d. Mondra Small Plate Grey
1405 Melamine
7.25"D x 1.12"H

e. Mondra Large Bowl Gey
1404 Melamine
9.0"D x 4"H

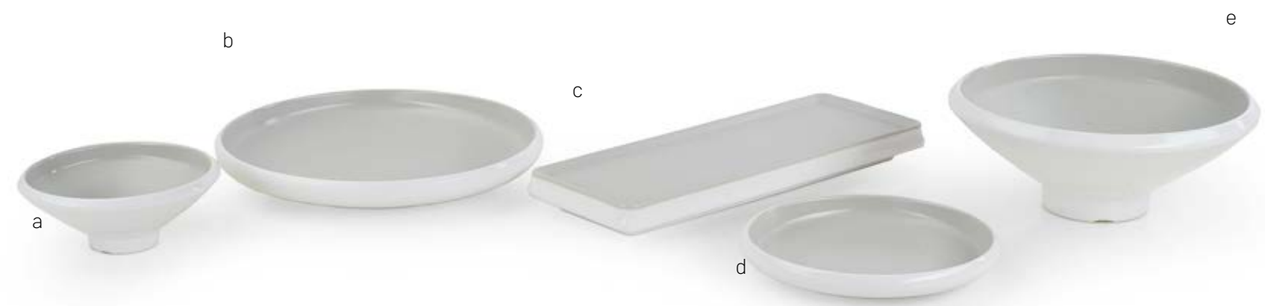

Mini Rimini Bowl
See Page 230

PONTA VIA

Let your food stand out and sparkle on our stunning collection of slate colored unbreakable Ponta Via dinnerware. 100% melamine means you will not sacrifice durability for beauty. Enjoy the stackability of our nearly indestructible dishes that are suitable for the busiest of commercial settings.

Ponta Via Main Plate
1417 Melamine
10"D x 0.9"H

Ponta Via Side Plate
1418 Melamine
7"D x 0.8"H

Ponta Via Large Bowl
1419 Melamine
10"D x 2"H

Ponta Via Small Bowl
1420 Melamine
5"D x 1.8"H

Ponta Via Soup Bowl
1424 Melamine
6"D x 3"H

Ponta Via Salad Bowl
1425 Melamine
8"D x 2"H

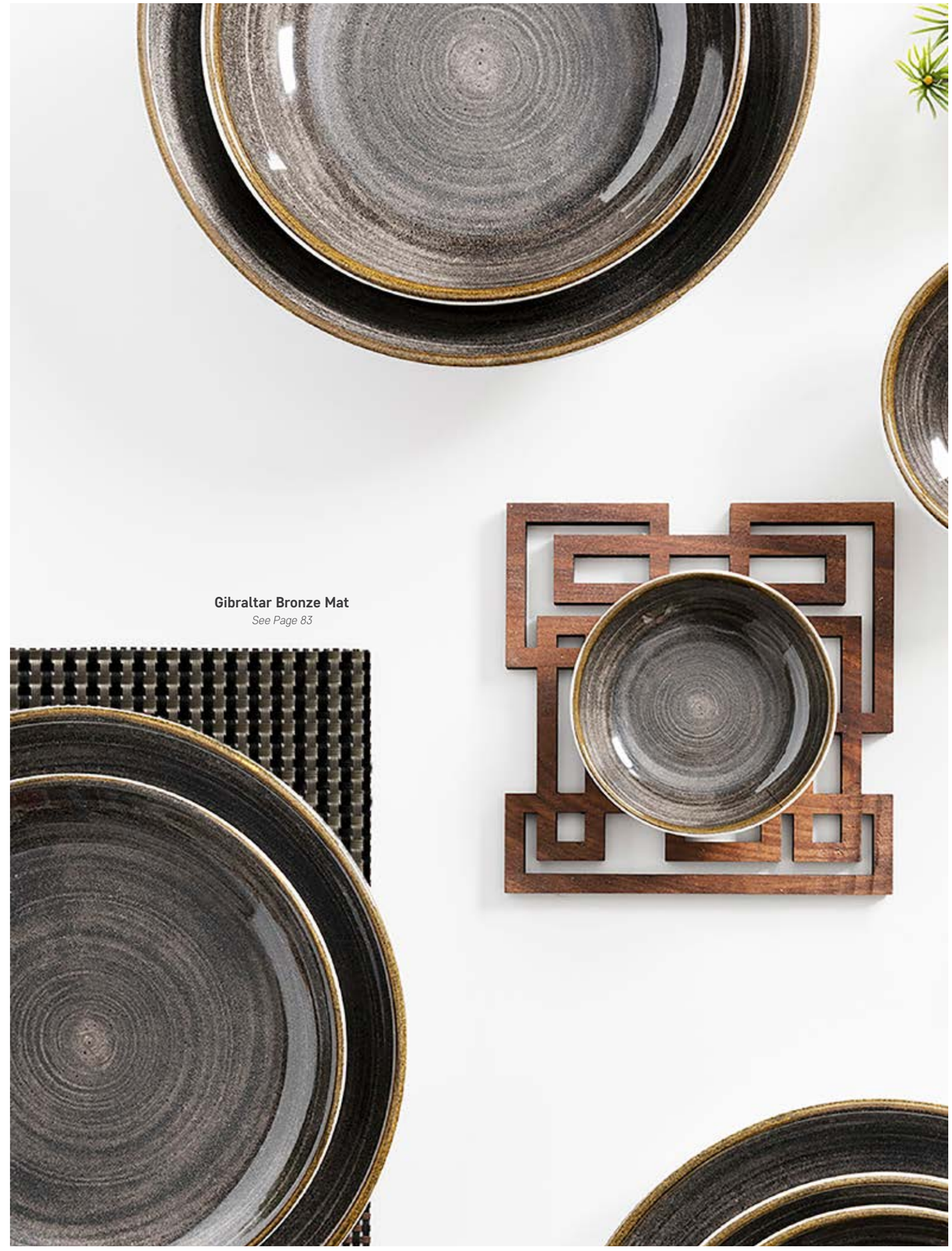

Gibraltar Bronze Mat
See Page 83

LUNA

Unique in every way, our Luna collection of melamine dinnerware is a show-stopper for sure. Fascinating textures of black, white and blue moonscape patterns complement an elegant matte white exterior, making each piece a work of art. One of our most durable dinnerware collections, Luna will set your tabletop apart from all others.

Luna Side Plate
1411 Melamine
6.3"D x 0.8"H

Luna Main Plate
1410 Melamine
10.5"D x 1"H

Luna Rectangular Platter
1416 Melamine
10.6"L x 4.7"W x 1"H

Luna Snack Tray
1415 Melamine
12.8"L x 7"W x 1.2"H

Luna Ramekin
1412 Melamine
3.3"D x 1.4"H

Luna Small Bowl
1414 Melamine
6.5"D x 2.1"H

Luna Large Bowl
1413 Melamine
8.5"D x 3"H

RIVIERA

Set, serve, stack and carry!

Riviera Small Plate
Navy Blue
1501 Melamine
5.5"D x 1.0"H

Riviera Small Shallow Bowl
Navy Blue
1502 Melamine
5.5"D x 1.75"H

Riviera Small Deep Bowl
Navy Blue
1503 Melamine
5.5"D x 2.5"H

Riviera Large Plate
Navy Blue
1505 Melamine
8"D x 1.25"H

Riviera Large Shallow Bowl
Navy Blue
1506 Melamine
8"D x 2.25"H

Riviera Large Deep Bowl
Navy Blue
1507 Melamine
8"D x 2.75"H

Riviera Small Plate
White
1511 Melamine
5.5"D x 1.0"H

Riviera Small Shallow Bowl
White
1512 Melamine
5.5"D x 1.75"H

Riviera Small Deep Bowl
White
1513 Melamine
5.5"D x 2.5"H

Riviera Large Plate
White
1515 Melamine
8"D x 1.25"H

Riviera Large Shallow Bowl
White
1516 Melamine
8"D x 2.25"H

Riviera Large Deep Bowl
White
1517 Melamine
8"D x 2.75"H

EASY TO CARRY. EASY TO CLEAN.

Riviera Snack Set Small
Navy Blue
1500 Melamine / Stainless Steel
5.5"D x 9.5"H

Riviera Snack Set Large
Navy Blue
1504 Melamine / Stainless Steel
8"D x 12.5"H

Riviera Snack Set Large
White
1514 Melamine / Stainless Steel
8"D x 12.5"H

Riviera Snack Set Small
White
1510 Melamine / Stainless Steel
5.5"D x 9.5"H

**Snack Sets include one shallow bowl, one deep bowl, one plate and a carrying frame*

NEVIS

Let your food be the shining star, presented on our two-toned collection of stunning matte melamine dishes.

BLACK SKY BLUE WHITE

a. Nevis Square Plate 11”
Melamine
11”L x 11”W x 1”H

Available in:
6148 - Black
6175 - Sky Blue
6278 - White

b. Nevis Square Plate 6”
Melamine
6”L x 6”W x 0.5”H

Available in:
6144 - Black
6194 - Sky Blue

c. Nevis Square Bowl 8”
Melamine
8”L x 8”W x 3”H

Available in:
6150 - Black
6195 - Sky Blue

Nevis Rectangular Platter Black
Melamine

6250 Small: 9.2” L x 6” W x 0.75” H
6251 Large: 12.2”L x 6”W x 1”H

Nevis Rectangular Platter Blue
Melamine

6266 Small: 9.2” L x 6” W x 0.75” H
6265 Large: 12.2”L x 6”W x 1”H

A SIDE OR SNACK PLATE WITH A POP OF COLOR

a. Nevis Round Plate 6”
Melamine
6”D x 0.7”H

Available in:
6229 - Lime
6230 - Sky Blue

b. Nevis Round Plate 9”
Melamine
9”D x 0.8”H

Available in:
6228 - Lime
6174 - Sky Blue

c. Nevis Round Plate 11”
Melamine
11”D x 1.1”H

Available in:
6173 - Lime
6507 - Sky Blue

d. Nevis Round Bowl 8”
Melamine
8”D x 3”H

Available in:
6149 - Black
6167 - White
6172 - Lime
6261 - Sky Blue

PINK PURPLE WHITE

LIME SKY BLUE BLACK

**Certain colors are produced on a special order basis; please inquire*

Nevis Square Plates

6”
Melamine
6.0˝L x 6.0˝W x 0.5˝H

6144 - Black
6194 - Sky Blue

11”
Melamine
11.0˝L x 11.0˝W x 1.0˝H

6148 - Black
6175 - Sky Blue
6278 - White

Nevis Round Plates

6”
Melamine
6.0˝D x 0.7˝H

6229 - Lime
6230 - Sky Blue

9”
Melamine
9.0˝D x 0.8˝H

6228 - Lime
6174 - Sky Blue

11”
Melamine
11.0˝D x 1.1˝H

6173 - Lime
6507 - Sky Blue

Nevis Bowls

Round 8”
Melamine
8.0˝D x 3.0˝H

6149 - Black
6167 - White
6172 - Lime
6261 - Sky Blue

Square 8”
Melamine
8.0˝L x 8.0˝W x 3.0˝H

6150 - Black
6195 - Sky Blue

Nevis Platters

Small
Melamine
9.2˝L x 6˝W x 0.75˝H

6250 - Black
6266 - Blue

Large
Melamine
12.2˝L x 6˝W x 1˝H

6251 - Black
6265 - Blue

ORGANICA BAMBOO

The look of wood, the durability of melamine.

Organica Bamboo Plate 6”
6063 Melamine
6.0˝D x 1.0˝H

Organica Bamboo Plate 9”
6064 Melamine
9.0˝D x 1.0˝H

Organica Wedge Plate
6067 Melamine
9.5˝L x 4.0˝W x 1.0˝H

**Certain colors are produced on a special order basis; please inquire*

Organica Large Double Bento Bowl Lime
6088 Melamine
13.0"L x 6.5"W x 3.5"H

ORGANICA BENTO BOWLS

The most versatile and fun food service vessel imaginable.

Organica Large Double Bento Bowl Blue
6095 Melamine
13.0"L x 6.5"W x 3.5"H

Organica Small Double Bento Bowl Lime
6096 Melamine
10.0"L x 5.0"W x 3.5"H

Not Shown:
Organica Small Double Bento Bowl Blue
6087 Melamine
10.0"L x 5.0"W x 3.5"H

ORGANICA COUPE

Clean and curved lines for a modern touch.

Organica Coupe White Large
6085 Melamine
10.0"L x 6.0"W x 3.5"H

Organica Coupe White Small
6080 Melamine
6.0"L x 3.8"W x 2.5"H

Organica Coupe Red Large
6084 Melamine
10.0"L x 6.0"W x 3.5"H

Lima Ramekin
6707 Melamine
2.9"D x 0.9"H - 2 oz.

RIMINI

Go color-crazy with our most versatile, practical and signature style of serving dishes!

CHOOSE YOUR COLOR

Smoke Bamboo, Orange, Teal
Royal Blue (special order color)

Smoke

Lime

Red

Blue

Bamboo

Sky Bamboo

NEW
PIAZZA AQUA

CHOOSE YOUR SIZE

Mini

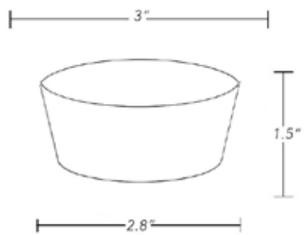

Medium

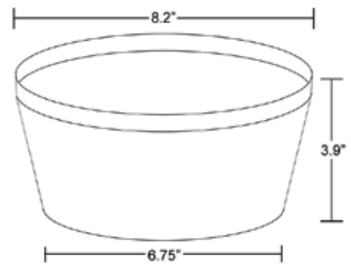

Small

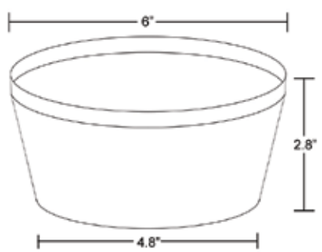

Large

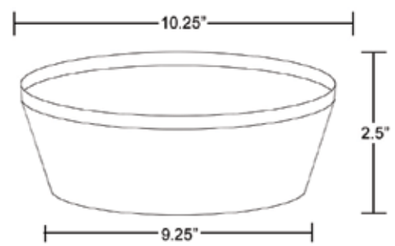

COLOR COORDINATE AND CREATE A COLLECTION THAT IS UNIQUE TO YOUR BRAND!

Rimini Bowl Small
Melamine
6.0"D x 2.8"H* - 16 oz.

6154 - Red
6073 - Lime
6074 - Smoke
6210 - Sky Blue
6072 - Bamboo
6224 - Sky Blue Bamboo
6076 - Piazza Aqua

Rimini Bowl Large
Melamine
10.25"D x 2.5"H* - 56 oz.

1106 - Smoke Bamboo
6213 - Tangerine Orange
1108 - Teal
1113 - Dark Blue
6071 - Smoke
6068 - Bamboo
6069 - Lime
6070 - Red
6209 - Sky Blue
6222 - Sky Blue Bamboo

***Total Height Includes Lid**

Rimini Bowl Medium
Melamine
8.2"D x 3.9"H* - 40 oz.

6193 - Red
6249 - Lime
6248 - Smoke
6218 - Sky Blue
6212 - Dark Blue
6059 - Bamboo
6223 - Sky Blue Bamboo

Rimini Bowl Oval
Melamine
14"L x 6.5"W x 4"H* - 48 oz.

1356 - White
6050 - Sky Blue Bamboo
6051 - Smoke Bamboo

Mini Rimini Bowl
Melamine
3"D x 1.5"H - 2 oz.

6281 - White
6282 - Sky Blue

Rimini Dome
1105 Polycarbonate
10.2" - 10.4"D x 2.75"H

GT Snack Tray
Melamine
13"L x 3.25"W x .75"H

1318 - White
1319 - Gray

Rimini Bowl Oval Smoke Bamboo
6051 Melamine
14"L x 6.5"W x 4"H

Georgetown White Bento Box with Side Compartment*
6176 Melamine
16"L x 10.3"W x 3.0"H
Lid Included

6242 - Smoke
6159 - Bamboo
7667 - Sky Blue Bamboo

PERFECT FOR FLATWARE OR CONDIMENTS

GEORGETOWN

Our most popular bento box!

Georgetown Bamboo Half Bento Box*
6247 Melamine
10.2"L x 7.0"W x 3.0"H
*Lid Included

1338 - Smoke
6255 - Piazza Aqua
6262 - Sky Blue Bamboo
6272 - Piazza Tan

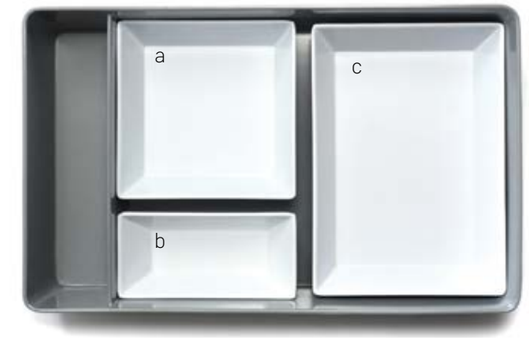

Georgetown Smoke Bento Box with Side Compartment*
6242 Melamine
16 "L x 10.3"W x 3.0"H

Georgetown Smoke Bento Box without Side Compartment*
6252 Melamine
14"L x 10.3"W x 3.0"H
Lid Included

6152 - White
6151 - Bamboo
6207 - Sky Blue Bamboo
6258 - Piazza Tan

Standard Colors

- White
- Bamboo
- Smoke
- Sky Blue Bamboo

MIX AND MATCH!

Removable insert dishes for different menu combinations.

a. Georgetown Square Dish*
6140 Melamine
6.1"L x 6.1"W x 1.6"H

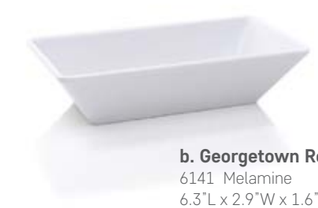

b. Georgetown Rectangle Dish Small*
6141 Melamine
6.3"L x 2.9"W x 1.6"H

Georgetown Square Dish Small*
6246 Melamine
3"L x 3"W x 1.6"H

c. Georgetown Rectangle Dish Large*
6142 Melamine
9.3"L x 6.5"W x 1.6"H

***Custom Color Options Available**

See Next Page For Insert Dish-Configurations.

Bento Box Dimensions

Box & Lid

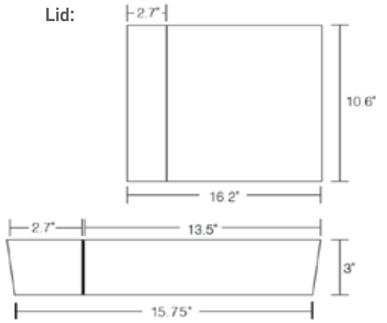

Georgetown Bento Box with Side Compartment

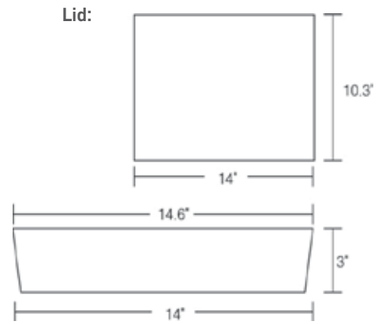

Georgetown Bento Box without Side Compartment

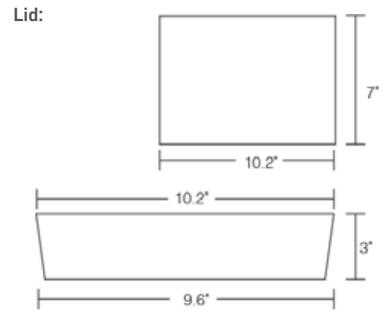

Georgetown Half Bento Box

Insert Dish Dimensions

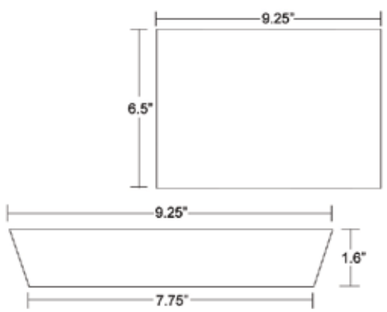

Georgetown Rectangle Dish Large

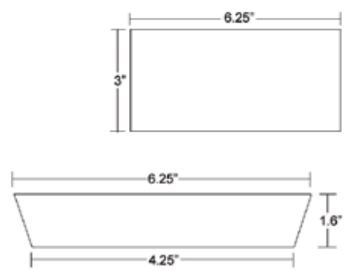

Georgetown Rectangle Dish Small

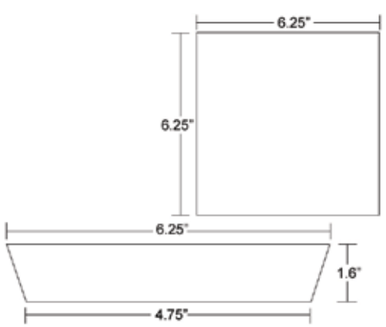

Georgetown Square Dish

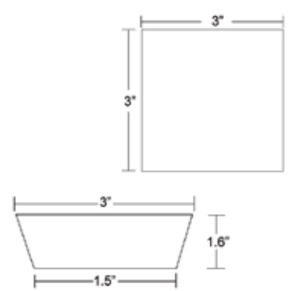

Georgetown Square Dish Small

Insert Dish Configurations

Naples Bento Box

Georgetown Half Bento Box

Georgetown Bento Box (with and without Side Compartment)

YES, WE CUSTOMIZE!

CUSTOM COLORS AVAILABLE
Custom orders must meet minimum requirements. Please call for more information.

SMOKE	DARK BLUE	PINK	ORANGE
EMERALD	TEAL	TAN	RED
YELLOW	PURPLE	SKY BLUE	BLACK

Match our bento box to meet your needs - whether it's branding colors, culinary menu items or ambiance! Our color matching process allows for production in virtually any color.

Custom artwork and logo options are also available.

BEVERLY HILLS

Our latest addition to compartmentalized cuisine options lets you serve up snacks, full meals and cabana cravings in separated style.

Beverly Hills Bento Box
6178 Melamine
16.6"L x 10.25"W x 2.4"H
Box comes with lid

SPLASH

Our middle-sized stackable classic.

Splash White Bento Box
6132 Melamine
12"L x 10.25"W x 2.75"H
Lid sold separately

Splash White Bento Box Lid
6121 Melamine
12.5"L x 10.8"W x 0.4"H

CRISTA

Stocked in white but make it your own with custom colors of your choice!

a. Crista Snack Rectangle Insert
6274 Melamine
10.0"L x 2.9"W x 1.6"H

b. Crista Snack Square Insert
6275 Melamine
3.3"L x 3.3"W x 1.6"H

a

b

Crista Snack Bento Box
6279 Melamine
Base: 12.6"L x 10.6"W x 2"H
Lid: 12.1"L x 10.2"W x 2"H
Box comes with lid

NAPLES

A compact version for lighter snacks.

Naples Navy Blue Bento Box*
6206 Melamine
11.0"L x 7.0"W x 3.0"H
**Lid not Included*

Naples Yellow Bento Box*
6208 Melamine
11.0"L x 7.0"W x 3.0"H
**Lid not Included*

Naples Green Bento Box*
6214 Melamine
11.0"L x 7.0"W x 3.0"H
**Lid not Included*

Naples Lid
Melamine
6221 White
6220 Green
6219 Yellow
6216 Navy Blue
10.7/8"L x 6.7/8"W x 05"H

Naples White Bento Box*
6215 Melamine
11.0"L x 7.0"W x 3.0"H
**Lid not Included*

Naples Smoke Bento Box*
6283 Melamine
11.0"L x 7.0"W x 3.0"H
**Lid Included*

Naples Blue Bento Box*
6204 Melamine
11.0"L x 7.0"W x 3.0"H
**Lid Included*

Naples Sky Bamboo Bento Box*
6298 Melamine
11.0"L x 7.0"W x 3.0"H
**Lid Included*

VERONA

Sometimes less is so much more.

Verona Bowl White
Melamine
Large: 6108 - 9.0"L x 8.0"W x 3.0"H
Small: 6111 - 5.5"L x 5.0"W x 1.75"H

Verona Bowl Smoke
Melamine
Large: 6110 - 9.0"L x 8.0"W x 3.0"H
Small: 6113 - 5.5"L x 5.0"W x 1.75"H

Verona Bowl Lime
Melamine
Large: 6109 - 9.0"L x 8.0"W x 3.0"H
Small: 6112 - 5.5"L x 5.0"W x 1.75"H

Lima Bowl Small
6703 Polycarbonate
6.1"D x 5"H - 14 oz.

Capri Bowl Clear Large
6627 Polycarbonate
9.8"D x 4.1"H - 30 oz.

Capri Bowl Clear Small
6646 Polycarbonate
5.8"D x 3.7"H - 20 oz.

Osaka Cube Small
6706 Polycarbonate
3.9"L x 3.9"W x 3.9"H

THE PERFECT NON SLIP POOL TRAY

Dorado Non Slip Tray - Light Grey
3900 Melamine & Cardboard
14"D x 1"H

Dorado Non Slip Tray - Dark Grey
3901 Melamine & Cardboard
14"D x 1"H

HAPPY

Perfectly-sized service trays that are stackable and so easy to maintain.

a

b

c

a. Happy Tray Smoke
6125 Melamine
19.1"L x 12.2"W x 1.8"H

b. Happy Tray White
6126 Melamine
19.1"L x 12.2"W x 1.8"H

c. Happy Tray Lime
6124 Melamine
19.1"L x 12.2"W x 1.8"H

d. Happy Tray Sky Blue
1029 Melamine
19.1"L x 12.2"W x 1.8"H

d

SPLASH TRAYS

Splash Tray Large White
(No Handle)
6082 Melamine
29.95"L x 16.98"W x 1.5"H

Splash Tray Large Brown
(No Handle)
6081 Melamine
29.95"L x 16.98"W x 1.5"H

Splash Tray Small White
(No Handle)
6094 Melamine
16.5"L x 12"W x 1.5"H

Splash Tray Small Blue
(No Handle)
6093 Melamine
16.5"L x 12"W x 1.5"H

Splash Tray Small Brown
(No Handle)
6092 Melamine
16.5"L x 12"W x 1.5"H

Splash Serving Tray Liner
9018 Vinyl
23.0"L x 16.3"W x 0.1"H

Splash Serving Tray
Brown
6107 Melamine
23.9"L x 16.96"W x 1.4"H

Splash Serving Tray
White
6888 Melamine
23.9"L x 16.96"W x 1.4"H

Manhattan Tray Matte Black
9208 Melamine
26.9"L x 19"W x 2.3"H

IT'S 5:00 SOMEWHERE!

Polycarbonate and tritan options that let you celebrate in shatterproof style

Fantasia Rocks
6800 Polycarbonate
3.5"D x 3.5"H - 11 oz.

Fantasia Highball
6802 Polycarbonate
3.3"D x 5.7"H - 15.9 oz.

POOLSIDE BARWARE

MAKE MINE A DOUBLE!

Fantasia Highball Blue
6803 Polycarbonate
3.3"D x 5.7"H - 15.9 oz.

Fantasia Rocks Blue
6801 Polycarbonate
3.5"D x 3.5"H - 11 oz.

FABULOUS TEXTURE. OLD WORLD CHARM.

St Germain Rocks
6806 Polycarbonate
3.5"D x 3.9"H - 11.8 oz.

Franca Highball Aqua
6673 Polycarbonate
3.6"D x 6.2"H - 18.4 oz.

Franca Rocks Aqua
6672 Polycarbonate
3.7"D x 5.3"H - 15.5 oz.

Franca Highball
6808 Polycarbonate
3.6"D x 6.2"H - 18.4 oz.

Franca Rocks
6809 Polycarbonate
3.7"D x 5.3"H - 15.5 oz.

Maui Highball Orange
6652 Polycarbonate
3.3"D x 5.3"H - 14 oz.

Maui Rocks Orange
6655 Polycarbonate
3.3"D x 3.7"H - 10 oz.

Maui Highball Blue
6651 Polycarbonate
3.3"D x 5.3"H - 14 oz.

Maui Rocks Blue
6654 Polycarbonate
3.3"D x 3.7"H - 10 oz.

Maui Highball Clear
6653 Polycarbonate
3.3"D x 5.3"H - 14 oz.

Maui Rocks Clear
6656 Polycarbonate
3.3"D x 3.7"H - 10 oz.

ADD SOME POPS OF COLOR TO YOUR POOLSIDE BARWARE.

Sunset Goblet
6692 Polycarbonate
3.5"D x 6.8"H - 18 oz.

George Highball
6813 Polycarbonate
3.3"D x 8.0"H - 19 oz.

Julia Goblet
6700 Polycarbonate
3.3"D x 6.0"H - 14 oz.

Capri Highball Clear
6619 Polycarbonate
3.5"D x 6.8"H - 18 oz.

Capri DOF Clear
6612 Polycarbonate
3.5"D x 5.0"H - 14 oz.

Capri Highball Aqua*
6618 Polycarbonate
3.5"D x 6.8"H - 18 oz.

Capri DOF Aqua*
6611 Polycarbonate
3.5"D x 5.0"H - 14 oz.

These SKUs are produced on a special order basis; please inquire

HIDE
WEAR & TEAR
WITH SUBTLE
PATTERNS

Hudson Highball Clear
6663 Polycarbonate
3.75"D x 6.25"H - 17 oz.

Hudson Tumbler Clear
6664 Polycarbonate
3.4"D x 4.8"H - 12 oz.

Hudson Rocks Clear
6660 Polycarbonate
3.4"D x 4.5" H - 10 oz.

Stresa Rocks
6708 Tritan
3.6"D x 4.5"H - 16 oz.

Stresa Highball
6709 Tritan
3.8"D x 6.5"H - 22 oz.

OUTDOOR DINING HAS NEVER BEEN SO STYLISH.

Groove Highball
6722 Polycarbonate
3.3" D x 5.6" H - 15.9 oz.

Groove Rocks
6721 Polycarbonate
3.5" D x 4" H - 12.9 oz.

Checker Rocks
6699 Polycarbonate
3.4"D x 3.7"H - 10 oz.

Checker Tumbler
6698 Polycarbonate
3.1"D x 5.6"H - 13 oz.

Checker Highball
6697 Polycarbonate
3.4"D x 6.1"H - 16 oz.

YES, WE CUSTOMIZE!

Any color of your choice. Please inquire

Brava Pitcher
6817 Polycarbonate
4.25"D x 10.2"H - 74 oz.

Granada Goblet
6816 Polycarbonate
4.5"D x 7.0"H - 22.6 oz.

Modern lines to
hide wear and tear

Pisa Highball Clear
6659 Polycarbonate
3.5"D x 6.4"H - 21 oz.

Pisa DOF Clear
6658 Polycarbonate
3.6"D x 4.3"H - 16 oz.

Bel Air Tumbler Clear
6602 Polycarbonate
3.0"D x 4.8"H - 18 oz.

Bel Air Rocks Clear
6601 Polycarbonate
3.0"D x 3.8"H - 12 oz.

Bel Air Flute
6710 Polycarbonate
2.1"D x 5.8"H - 8.4 oz.

100%
SHATTERPROOF

Luca Wine Goblet
6720 Polycarbonate
2.6"D x 8.0"H - 16 oz.

Luca Flute
6719 Polycarbonate
2.0"D x 10.0"H - 10 oz.

Luca Tumbler
6718 Polycarbonate
2.8"D x 4.5"H - 16 oz.

ACHIEVE THE BEAUTY OF GLASS MINUS THE BREAKABILITY!

Dorado Martini
6717 Polycarbonate
3.8"D x 4.5"H - 8.5 oz.

Capri Martini Aqua*
6633 Polycarbonate
4.6"D x 6.6"H - 8 oz.

Capri Margarita Aqua*
6630 Polycarbonate
5.0"D x 6.4"H - 10 oz.

**These SKUs are produced on a special order basis; please inquire*

CAPRI

A size and shape to suit all needs.
Crystal clear and designed to last.

Capri Beer Mug Clear
6608 Polycarbonate
4.5"L x 3.5"W x 6.1"H - 22 oz.

Capri Pilsner Beer Clear
6637 Polycarbonate
3.2"D x 9.5"H - 12 oz.

Capri Margarita Clear
6631 Polycarbonate
5.0"D x 6.4"H - 10 oz.

Capri Pina Colada Clear
6716 Polycarbonate
3.2"D x 8"H - 13.8 oz.

Capri Red Wine Clear
6641 Polycarbonate
4.2"D x 8.2"H - 32 oz.

Capri White Wine Clear
6648 Polycarbonate
3.0"D x 8.5"H - 12 oz.

Capri All Purpose Clear
6604 Polycarbonate
3.7"D x 9.0"H - 20 oz.

Capri Shot Clear
6643 Polycarbonate
1.9"D x 2.3"H - 2 oz.

Capri Martini Taster Clear
6712 Tritan
3.1"D x 3.6"H - 2.5 oz.

Capri Margarita Taster Clear
6711 Tritan
3.1"D x 3.6"H - 3.2 oz.

Bistro Ice Cream Bowl
7765 Polycarbonate
4"D x 4"H - 8 oz.

Capri Latte Clear
6628 Polycarbonate
2.9"L x 4.2"W x 6.0"H - 12 oz.

Capri Martini Clear
6634 Polycarbonate
4.6"D x 6.6"H - 8 oz.

Capri Flute Clear
6615 Polycarbonate
2.0"D x 8.0"H - 4.5 oz.

Capri Brandy Balloon Clear
6690 Polycarbonate
4.4"D x 5.8"H - 15 oz.

Capri Bottle Cooler Clear
6686 Polycarbonate
8.5"L x 8.1"W x 8.5"H - 110 oz.

Capri Ice Bucket Clear with tongs
6623 Polycarbonate
7.8"L x 7.0"W x 8.5"H - 110 oz.

Capri Pitcher Clear
6640 Polycarbonate
8.0"L x 5.6"W x 10.6"H - 64 oz.

CAPRI BEVERAGE DISPENSERS

Crystal clear and super durable - ideal for inside or out. Serve in fabulous style.

Capri Dispenser Large - Round
3904 Polycarbonate
11.5" D x 16" H- 2.3 Gl

Capri Dispenser - Square
3903 Polycarbonate
9.5"L x 9.5"W x 15"H - 2 Gl

Capri Canisters (S/3)
6728 Polycarbonate
Small 4"L x 4"W x 4.25"H - 24 oz.
Medium 4"L x 4"W x 7.75"H - 48 oz.
Large 4"L x 4"W x 11.5"H - 72 oz.

Brava Pitcher
6817 Polycarbonate
4.25"D x 10.2"H - 74 oz.

Capri Infuser Pitcher
6725 Acrylic
7.5"L x 5.5"W x 11"H - 81 oz.

CANISTERS, CARAFES, AND MORE

Zurich Carafe Large
1131 Glass
4.3"D x 14.5"H - 52 oz.

Lima Carafe Large
6701 Polycarbonate
4.4"D x 11.4"H - 48 oz.

Lima Carafe Small
6702 Polycarbonate
3.6"D x 7.8"H - 22 oz.

Capri Large Square Carafe
6726 Acrylic/ABS
3.75"L x 3.75"W x 12.75"H - 50 oz.

Capri Small Square Carafe
6727 Acrylic/ABS
3.5"L x 3.5"W x 10.5"H - 37 oz.

Capri Round Carafe
6724 Acrylic/ABS
4.5"D x 12"H - 40 oz.

KIDS KORNER

Colorful and fun, smiles guaranteed!

Lotsafun Bowl
6155 Melamine
6"D x 2.25"H

Lotsafun Kid's Plate
6156 Melamine
9.2"D x 1.2"H

100% KID PROOF! ITEMS THAT CAN'T BE BROKEN

Splatter Bowl
6185 Melamine
6"D x 2.25"H

Splatter Plate
6186 Melamine
9.2"D x 1.2"H

Capri Pina Colada Clear
6716 Polycarbonate
3.2"D x 8"H - 13.8 oz.

TERMS & CONDITIONS

Minimum opening order is $250 and any reorder is $100. Backorders may be shipped without notice within six months of order ship date. Credit card orders will be processed using the credit card provided by client at time of placing or confirming the order, unless the client specifically requests in writing that the credit card not be kept on file. Clients may place orders via fax, email or by telephone, in which case any charges will be posted to a credit card kept on file (unless specifically requested otherwise by the client in writing).

IMPULSE! reserves the right to increase quantities to meet our case pack requirements. IMPULSE! will do its best to ship goods within seven days of receipt of payment. We accept VISA, MasterCard and American Express. Hospitality clients may apply for credit terms by faxing trade and bank references to ATTN: ACCOUNTING DEPT. +1 954 957 9902. Please allow up to 2 weeks for term submission requests.

Orders are shipped Ex Works Deerfield Beach, FL or Los Angeles, CA (USA) by the most efficient means as determined by IMPULSE! We are not responsible for breakage that may occur after your shipment has left our facility. We will, of course, do our best to pack our items with care to prevent breakage, but we cannot control mishandling by carriers. Any damage or loss must be claimed by the recipient with the carrier. No return will be accepted without IMPULSE! authorization. Packaging should be held onto and not discarded if there is breakage for claims purposes. Store credit may be granted for items returned in saleable condition, subject to a restocking fee of 25%. If an invoice remains unpaid for 30 days following the date of invoice, late charges of 2% per month (or the maximum rate allowed by Florida law) will be charged until the account is paid in full. Accounts more than 60 days past due will be sent to collections. Client agrees to pay all collection costs and attorney's fees.

Many IMPULSE! products are handcrafted. As a result our products will have slight variations in color, texture, and finish. These variations are not considered damages or defects and returns will not be accepted. If a client feels that they have received defective goods, or if for any reason a client decides to cancel an order after it has been processed by IMPULSE!, the client will be responsible for all freight costs to send and / or return the goods, plus a 25% restocking fee. If the client decides to return goods that the client feels are defective, the client will be responsible for all return freight costs. IMPULSE! will in good faith inspect any goods received, and if the goods are considered to be defective by IMPULSE!, the client will receive store credit for the goods returned as well as return freight.

IMPULSE! Enterprises, LLC
710 South Powerline Road, Suite C, Deerfield Beach, FL 33442, USA
P: +1.954.957.9917 F: +1.954.957.9902
info@impulseenterprises.com | www.impulseenterprises.com